AD-A089 526 ROYAL AIRCRAFT ESTABLISHMENT FARNBOROUGH (ENGLAND) F/G 21/3
SOLAR POWER SATELLITES - A REVIEW OF THE SPACE TRANSPORTATION O--ETC(U)
MAR 80 D G FEARN
UNCLASSIFIED RAE-TR-80034 DRIC-BR-74953 NL

1 OF 3
AD
A089526

UNLIMITED

BR74953

TR 80034

②

LEVEL II

AD A089526

ROYAL AIRCRAFT ESTABLISHMENT

*

Technical Report 80034

March 1980

SOLAR POWER SATELLITES - A REVIEW OF THE SPACE TRANSPORTATION OPTIONS

by

D.G. Fearn

DTIC
ELECTE
SEP 25 1980
D
C

*

Procurement Executive, Ministry of Defence
Farnborough, Hants

DDC FILE COPY

UNLIMITED 80 9 22 000

(14) RAE-TR-80034

UDC 629.195 : 620.91 : 629.19.035.52 : 629.194 : 629.192.21

(11) Mar 80 (12) 195

ROYAL AIRCRAFT ESTABLISHMENT

(9) Technical Report 80034

Received for printing 5 March 1980

(6) SOLAR POWER SATELLITES - A REVIEW OF THE SPACE TRANSPORTATION OPTIONS

by

(10) D. G. Fearn

SUMMARY

Solar power satellites, if developed, could supply a large proportion of the world's future electrical energy requirements in a safe and pollution-free manner. However, such enormous orbiting structures, with masses of up to 100000 tonnes, can only be built and operated if suitable transportation systems are provided. This Report reviews the options available for lifting both heavy payloads and personnel to low earth orbit, and from there to geostationary orbit. It is concluded that conventional launcher technology, using liquid hydrogen/liquid oxygen engines, should be adequate for the former task. The latter can best be accomplished using electric propulsion, with ion thrusters being the most suitable devices, owing to their high efficiency and advanced state of development. Environmental effects of such a transportation system are considered, and it is concluded that they should not prove to be unacceptable.

(18) DRIC (19) BR-74933

Departmental Reference: Space 577

Copyright
©
Controller HMSO London
1980

310450

LIST OF CONTENTS

Page

1 INTRODUCTION 5

2 ORBITING POWER SATELLITE CONCEPTS 8
- 2.1 Solar photovoltaic conversion 11
- 2.2 Solar thermal conversion 13
- 2.3 The use of nuclear energy 15
  - 2.3.1 Nuclear reactors in orbit 16
  - 2.3.2 Power relay satellites 19
- 2.4 Laser power transmission 20

3 TRANSPORTATION REQUIREMENTS 22

4 TRANSPORTATION TO LOW EARTH ORBIT 25
- 4.1 Number of vehicle stages 26
- 4.2 Vehicle configuration 30
- 4.3 Propulsion concepts 33
- 4.4 Propellants 36
- 4.5 Launch safety 38
- 4.6 Acoustic noise 43
- 4.7 Re-entry 47
- 4.8 Launch sites 49
- 4.9 HLLV development and costs 52
- 4.10 Personnel transport 59

5 TRANSPORTATION TO GEOSTATIONARY ORBIT 61
- 5.1 Chemical rocket systems 62
- 5.2 Electric propulsion systems 64
  - 5.2.1 Types of electric thruster 66
- 5.3 Resistojet systems 73
- 5.4 Nuclear systems 73
- 5.5 Orbital transfer using solar electric propulsion 75
  - 5.5.1 Solar electric tug 75
  - 5.5.2 SPS self-propulsion technique 77
  - 5.5.3 Orbit transfer strategy 80
  - 5.5.4 Environmental effects during orbit transfer 83
- 5.6 Cost analysis 86

6 ATMOSPHERIC POLLUTION FROM THE HLLV 87
- 6.1 Pollution sources 88
- 6.2 The effects of various pollutants 89

034

LIST OF CONTENTS (concluded)

Page

6.3 Comparison of HLLV pollutants with other sources 90
  6.3.1 Carbon dioxide 94
  6.3.2 Water vapour 96
  6.3.3 Nitrogen oxides 99
  6.3.4 Ozone 100
  6.3.5 Sulphur dioxide and carbon particles 102
  6.3.6 Carbon monoxide 103
  6.3.7 Methane 103
6.4 Effects on the upper atmosphere 104
6.5 Summarising remarks 105
7 CONCLUSIONS 106
Acknowledgments 109
References 110
Illustrations Figures 1-64
Report documentation page inside back cover

Accession For
NTIS GRA&I ☑
DDC TAB ☐
Unannounced ☐
Justification
By
Distribution/
Availability Codes
Dist | Avail and/or Special
A

1 INTRODUCTION

A cursory examination of the history of the industrialisation of the so-called developed nations immediately suggests that the supply of energy in various forms has been of paramount importance. Initially, in the industrial revolution, mechanical energy, derived from the steam engine, was responsible for the very rapid growth of manufacturing industry. Prior to the invention of that device, total reliance had to be placed on muscle power, either human or animal, assisted on occasions by water-wheels and windmills, and fossil fuels and wood were used only for heating.

Somewhat later, the rapid expansion of the availability of electricity, and the discovery of large reserves of readily exploited oil and natural gas, allowed an almost exponential increase in industrial and agricultural production to take place. This emphasis on growth continued virtually unchecked for most of the present century, with little consideration being given to the finite quantities of fossil fuels and mineral resources available for exploitation. Most countries deliberately encouraged this growth of production and consumption, on the assumption that it was essential for a high standard of living. Thus the rate of consumption of all resources increased very rapidly; for example, the demand for electricity doubled each 10 years, and most economic plans and forecasts predicted that this doubling would continue indefinitely[1]. The few warnings uttered by various sections of society were not heeded.

It was assumed, in the economic forecasts, that increasing energy demands could be met by discovering new reserves, despite much evidence that such reserves were becoming harder to find and increasingly expensive to exploit. However, the situation changed dramatically with the Middle East war in 1973, and it became generally accepted that fossil fuels would eventually become exhausted and that alternative sources of energy would be needed, in massive amounts, to sustain the present highly industrialised and mobile society. Thus a great deal of research effort has recently been devoted to renewable sources, such as wind power, wave power, and geothermal energy, although it appears that nuclear reactors may eventually have to provide the bulk of the requirements.

Most of the so-called renewable resources depend on the sun's radiation to drive them. For example, heating of the atmosphere by the sun causes bulk movements of air, the winds, and these, in turn, produce waves on the surface of the sea. The biomass is also able to exist only because plants and simple organisms are able to use the sun's energy via photosynthesis. Consequently, it is an obvious step to endeavour to use the sun's radiation directly. This appears to

034

PRECEDING PAGE BLANK-NOT FILMED

be a practical proposition in many parts of the world, where intense sunlight is received without appreciable interruption from cloud cover.

Extensive R and D programmes, particularly in the USA[2], have shown that two types of system are feasible, and that both are economically viable, in particular circumstances, at the present. However, widespread adoption depends crucially on massive cost reductions being achieved, and much of the current research has this objective.

The more widespread of these techniques is the use of photovoltaic generators, usually made of silicon semiconductor material. Many installations of a few kilowatts output have been made, chiefly for driving water pumps, refrigerators and communications systems, and a 100kW generator was planned for 1979 for a US National Park. In the alternative technique, parabolic mirrors are used to concentrate the radiation into boilers supplying heat engines with high pressure vapour. In both cases, the output is in the form of electricity.

The main disadvantages of these conversion techniques is the relatively low average energy received per unit area, even at the best sites, and the complete absence of the sun's radiation during night-time. The former causes collecting areas to be relatively large, whilst the latter implies that energy storage is mandatory, if base-load is to be supplied. Both are very expensive to provide[2]. To quote some actual values, although the solar flux at the earth's orbit[3] is between 1260 and 1440 W/m^2, there are many losses in the atmosphere[4], of which scattering accounts for 20%, reflection 35%, and absorption 15%. As a result, even in cloudless conditions over the Sahara, a maximum of 800 W/m^2 reaches the surface. The mean value for W. Europe is only 100 W/m^2.

There are, consequently, excellent reasons for placing the radiation collectors in orbit. Not only is the flux density increased very considerably, it is also completely predictable and is received continuously, apart from brief eclipses a few times per year[5]. As a result, a great deal of effort has been devoted to studying, in very considerable depth, various solar power satellite (SPS) concepts. In general, it has been concluded that there are no insurmountable technical reasons for rejecting this solution to the problem of supplying adequate energy to meet our future requirements.

Most SPS concepts are fundamentally very simple, and are based on the idea originally proposed by Glaser[6] in 1968. This idea was to place in geostationary orbit a large planar array of solar cells, with the objective of producing a substantial quantity of electrical power (Fig 1). This power is converted from dc to microwave form, then transmitted to earth from an antenna, using the phased array principle[7,8]. The microwave beam is aimed at a receiving antenna (rectenna) on the earth's surface, the function of which is to convert the RF power back to dc with high efficiency.

This principle has been extensively studied and refined since 1968, and many very interesting designs have been published; three due to Grumman[9], Boeing[7] and Rockwell[10,11] are depicted in Figs 2, 3 and 4 respectively. In these studies, all aspects of the technology have been considered in great depth. For example, various types of solar cells have been included, some using radiation-concentrating mirrors[10]. Different methods of satellite construction[12-14] have been investigated in detail, as have the methods of microwave beam shaping and control[7,8]. Much effort has been deployed in examining the impact on the environment, including safety aspects of transmitting power levels of up to 10 GW via microwave beams[7,15], and many far-reaching economic analyses have been performed.

The alternative SPS principle, of deploying large parabolic mirrors to concentrate sunlight so that its energy can be converted into electricity by means of a heat engine, as illustrated in Fig 5, has also been extensively studied. It has been clearly demonstrated that this concept is technically feasible[16,17] and that the choice between it and the photovoltaic route will be made on economic grounds.

It should also be mentioned that other orbiting power production systems have been proposed, many of them involving nuclear reactors; an example[18] is shown in Fig 6. Although there is no doubt that most of them could be constructed, economic and political difficulties can be envisaged that might make them unacceptable. In addition, an orbiting power relay satellite system has also been advocated (Fig 7).

All proposed SPS concepts have at least two major physical parameters in common. As indicated in Figs 1 to 5, they are characterised by huge sizes and masses. Typically, their dimensions are of the order of many kilometres, and their masses are several tens of thousands of tonnes. An immediate consequence of these values is that an SPS system can only be constructed and deployed if a suitable transportation system is also developed. This must have a very large payload capability and must be much more economical to operate than present-day systems, including the Space Shuttle[19]. Such a transportation system will consist of two major components; an almost-conventional launcher, albeit of very large size, for lifting substantial masses to low earth orbit (LEO), and one or more types of space-based vehicle for carrying materials, components and personnel from LEO to geostationary earth orbit (GEO).

As the development of this transportation system is crucial to the success of any space venture requiring large masses to be placed in earth orbit, primarily the deployment of solar power satellites, much effort has been devoted to the study of the many technical options available for each of the two components. The status of these investigations is reviewed in some depth in this Report, and it is concluded that there are no insurmountable technical or environmental objections to the development and use of such a space transportation system.

To place the main topic of the Report properly in context, the review of transportation technology is preceded by an account of the various orbiting power system options that have been proposed. As well as the SPS, these include the nuclear reactor concept mentioned above, and the power relay satellite.

2 ORBITING POWER SATELLITE CONCEPTS

Since Glaser[6] first proposed the use of solar power satellites to meet a significant fraction of the earth's requirements for electrical energy, a bewildering number of publications have appeared on the topic. These have included analyses of a vast range of variations on the SPS theme, a number of which have successfully withstood extremely detailed examinations by NASA contractors such as Boeing and Rockwell. Most of this work has been funded by US Government Agencies, mainly NASA and DOE, but a limited amount has been carried out in Europe, notably at the University of Berlin[20,21] and at ESTEC[22], with a smaller contribution[23,24] from the UK.

An excellent survey of the progression of these many SPS studies has been produced by Kassing[25], who considered mainly the photovoltaic option. It clearly demonstrated the way in which activity has accelerated since 1975, as can be seen by examining the summary presented in Table 1.

Table 1

SPS history in USA to mid 1978 (Kassing, ESTEC)

Photovoltaic solar power satellite history in USA													
	Prepared by:	Major milestone or study	1968-71	72	73	74	75	76	77	78	79	80
1	A.D. Little (P. Glaser)	First concept of a SPS	▽									
2	MFSC	Specification SPS systems definition study	□									
3	Grumman	Engineering report on SPS	□									
4	MSFC	Solar power utilisation plan		□								
5	MSFC	Twenty year solar power development plan		□								
6	A.D. Little (P. Glaser)	SSPS - patent			▽							
7	A.D. Little	SPS - feasibility study			□							
8	Martin Marietta	SPS orbital assembly and maintenance study					□					
9	Le RC	High voltage solar array study					□					
10	Raytheon	Microwave power transmission system study					□					
11	JSC	Initial technical, environmental and economic evaluation					□	□				
12	ECON/Grumman	Economical and engineering analysis					□	□				
13	Aerospace Corporation	Large devices in space					□					
14	MSFC	Synopsis of different SPS concepts					□					
15	US-House of Representatives	Hearings on SPS					▽	▽	▽			
16	PRC Systems Sciences	Survey of SPS						□				
17	ERDA	Task group report on SPS						▽				
18	JSC	Analysis of alternative f. transportation SPS to GEO						□				
19	MFSC	Engineering and economic analysis summary						□				
20	JSC	Preliminary assessment of technological advancement requirements						□	□			
21	JPL	Comparative assessment of orbital and terrestrial central power stations					□	□	□			
22	MDAC	SCB-study						□	□			
23	Grumman	SCB-study						□	□			
24	Grumann	OCDA-study						□	□			
25	A.D. Little	SPS impacts on the utilities							□			
26	ERT	SPS transport environmental impacts							□			
27	ECON	Political and legal implications of SPS							□			
28	Boeing	SPS-system definition studies (Part 1 to 3)							□	□		
29	Rockwell	SPS-system definition studies (Part 1 to 3)							□	□		
30	DOE/NASA	Three years plan on SPS concept development and evaluation							□	□ ⬚	⬚	⬚
31	Boeing	Introduction of the bill HR 10601								▽		
32	US-House of Representatives	Authorization of $25M, according to HR 10601								▽		
33	Argonne	Comparative assessment								⬚		
34	Batelle Pacific NW	Microwave beam into ionosphere experiment								⬚	⬚	
35	National Science Found.	SPS-full scale development plan valuation									⬚	

Although the selection of contracts or major occurrences for inclusion in this Table has had to be arbitrary to some extent, it is immediately evident from the volume of work alone that the SPS concept must be regarded as a serious possibility. This conclusion is supported by the continued funding of SPS studies by both NASA and DOE[26,27], and of work on large space structures in general by NASA[28]. In addition, the declining popularity of terrestrial nuclear power sources automatically increases dependence upon the alternatives, only one of which, the SPS, is capable of providing very large amounts of energy, in an environmentally clean manner, into the indefinite future[29]. Even fusion power, should it be achieved, suffers from the limitation imposed by the relative scarcity of lithium; only if the deuterium-deuterium reaction can be utilised will this limitation be avoided.

A lesser amount of work has dealt with the orbiting nuclear power systems and the power relay satellite concepts, although both have been studied in some depth. Despite the fact that the former can be shown to have certain advantages[18], it is probably unacceptable politically at the present time. In any case, the supply of uranium or thorium for these reactors is not unlimited. The latter concept will present extremely severe technical difficulties, which may not be soluble, and the advantages[30] claimed for it may not be achievable. Consequently, it is not unreasonable to conclude that the first power systems to be deployed in orbit will be solar power satellites, making use of the sun's radiation to supply electrical energy in very large quantities.

As already mentioned, there are two basic methods by which solar energy can be employed by an SPS. Both are briefly considered below. More comprehensive comparisons, such as those by Cooke-Yarborough[17] and Oman and Gregory[16], concluded that there is very little difference between the two concepts in terms of physical size, mass or efficiency, so that costs become crucial. These costs depend critically on the price of solar cells, which, it is estimated, may fall to as low as 10c per watt by about 1990. As well as the introduction of new manufacturing technology, it is anticipated that this can be achieved by massive volume production, which will certainly be vital to any SPS programme[9]. The current US Department of Energy goal is about 50c per watt, to be achieved by 1982, and it is predicted that a price of between 10c and 90c per watt will be attained for the SPS application. If the lower end of this band can be reached, the photovoltaic option will probably prove cheaper than its competitor, the solar-heated Rankine system.

It should be mentioned that this analysis assumes the use of silicon or gallium arsenide solar cells that can be annealed. In other words, the damage continually inflicted upon them by high energy particles can be repaired by heating[7,9], as illustrated schematically in Fig 8. There is some evidence that this can be done by a variety of methods[31].

2.1 Solar photovoltaic conversion

This concept is basically very simple. As shown in Figs 1 to 4, a large array of solar cells is placed in synchronous orbit, where its attitude is continually corrected so that it always faces the sun. The sun's radiation is converted by these cells to electricity, with an efficiency, it is anticipated, of 17-18%[31]. The cells are connected in a series/parallel arrangement, so that, eventually, currents are passed along the main busbars of the satellite at a potential difference of around 40 kV. The use of such a high voltage minimises resistive losses, whilst, it has been estimated, the leakage power loss through the ambient plasma will be essentially zero[32].

The dc current produced is passed to huge rotating slip-rings, which transfer it to microwave power converters, which are normally assumed to be klystrons. An array of many thousands of these is mounted on the rear of an antenna facing the earth. The slip-rings are necessary to allow relative rotation between the antenna and the solar array; the former must be accurately pointed towards the receiving rectenna on the ground, whilst the latter must always face the sun.

The antenna, of 1 to 1.5 km diameter, is normally a phased array, each subsection producing an RF output with exactly the correct phase and amplitude to form a narrow beam of energy directed precisely at the rectenna. Although the technological difficulties associated with the design, control and maintenance of such a system are severe, it has never been demonstrated that the requirements cannot be met. A Boeing antenna design[53] is shown in Fig 9.

The beam passes through space to the top of the atmosphere, through the ionosphere, then down to the ground. The interaction with the atmosphere is minimal[1,34], although there has been, in the past, concern[35,36] expressed regarding its possible effect on radio communications, through heating of the ionosphere[37]. This is an area requiring much additional investigation[38].

The receiving rectenna[9] (Fig 10) is a large area structure consisting of many small dipoles mounted in front of a reflecting plane. Each dipole is connected to its own diode and filter circuit, or these may be integral with it. The overall efficiency of this simple arrangement is very high, as is that of the whole power transmission system.

034

A typical SPS design, due to Grumman, is illustrated in Fig 2. It is sized to produce, at the output terminals of the rectenna, a power of 5 GW and, to accomplish this, a huge area of solar cells is needed. The total array area is 83 km^2, and the mass is 27200 tonnes. These dimensions and the associated mass clearly show why an SPS project would be so enormous, from all points of view. An even larger SPS design is shown in Fig 3. This was produced by Boeing[7], under NASA contract, and was chosen by NASA as a baseline configuration for more detailed study[33]. It generates 17 GW from a vast array of solar cells covering an active area of 100 km^2. The power is transmitted from two antennas to give a final output on the earth's surface of 10 GW. The dimensions of the solar array are 21.28 × 5.3 km, and the total mass of the spacecraft is likely to be in the range 77000-97500 tonnes[33].

The above designs, together with several others exhibiting rather different concepts, are also illustrated schematically in Fig 11, which is due to Kassing[22,25]. The Grumman 5 GW design, which is based on an original idea by Glaser[39], is shown in the left-hand column; it is depicted in a little more detail in Fig 2. The modular concept from Berlin has been significantly improved by recent work, and an evolutionary development plan for it has been evolved, making use of the Space Shuttle in most of the early stages[20]. The cable/column construction technique proposed by the Johnson Space Center[40] has dimensions 28.8 × 30.8 × 14.4 km, for a power output of 10 GW. The concept in column 4 is very different from the others; it consists of many separate power producing segments strung along a current-carrying cable, the whole being stabilised by gravity gradient forces[41]. Column 5 depicts an intensively studied Rockwell idea[42], which uses gallium arsenide solar cells, with concentrators made from plane mirrors. Another version of this concept, due to Boeing[43], is shown in Fig 4.

More recently, NASA and the US Department of Energy have collaborated in carrying out a study in depth[13,44] of SPS systems, concentrating on reference designs based on earlier work mentioned above. These designs[13,45] are shown schematically in Fig 12. Both are photovoltaic and produce a net power output at the terminals of the rectenna of 5 GW. The one based on silicon technology is effectively one half of the Boeing concept illustrated in Fig 3, whilst that using gallium arsenide solar cells is a modified version of this incorporating concentrators.

It should be pointed out that it is not economically feasible to construct an SPS to operate at a much lower power level than a few gigawatts. This is because the antenna must be of a certain diameter to keep the microwave beam to a reasonable cross-sectional area, and the antenna must be used to transmit at its maximum power level if it is to be cost effective. An economic analysis is necessary to determine the optimum size, but the usual answer is about 5 GW per antenna; this analysis must include many variables, such as the maximum permitted power flux density in the ionosphere, the cost of the land on which the rectenna is to be built, and the cost of space transportation.

2.2 Solar thermal conversion

Very many analyses have been reported of heat engine SPS concepts (see, for example, Refs 7, 42, 46 and 47). They all have in common a series of collectors to concentrate the solar radiation into an aperture in a boiler system, from which the vapour of a working fluid is fed, under pressure, to a heat engine. Of necessity, the system must operate in a closed cycle. The heat engine is coupled to some form of generator, which produces dc electrical power. This power is fed to a microwave transmission system identical to that on a photovoltaic SPS.

The reason for studying such systems early in the development of SPS concepts was that they offer, at least theoretically, much higher values of efficiency than do photovoltaic systems. This is because the collection of solar radiation by the use of reflectors can approach 100% efficiency, whereas solar cells barely approach 20% (Fig 8). Consequently, a much smaller spacecraft should be capable of producing the same amount of power. It would weigh less and be cheaper to produce.

Unfortunately, this is an oversimplified view, because the maximum heat engine efficiency that can be obtained is dependent on the ratio of the final to the initial temperatures of the working fluid, T_f/T_i. The maximum attainable efficiency is then $(1 - T_f/T_i)$, the Carnot efficiency. Of course, this ideal value is never achieved. In a terrestrial system, T_f can be relatively low, all losses being dissipated via cooling towers or similar means, but, in space, a low value of T_f implies the use of radiators of massive size, which will be extremely heavy (they must be quite thick to conduct the heat to their extremities, or they must be equipped with efficient heat pipes). Thus attainable efficiencies are considerably lower than the simple view would indicate, at least if reasonable mass targets are to be met.

Of course, it is possible to use a relatively high heat rejection temperature, T_f, to enable the radiators to be of low area and mass. However, to maintain efficiency, T_i must be increased correspondingly, and this can

034

introduce materials problems in the heat exchanger and turbines. Terrestrial experience suggests that sufficiently high values of T_i can be used in the Brayton cycle, because very high power gas turbine aircraft engines operating with this cycle have been extremely reliable, with turbine inlet temperatures of over 1600 K. The working fluid is a gas throughout the cycle, so there are no boiling or condensation problems.

Despite these apparent advantages, the Brayton cycle has proved inferior to the potassium-Rankine cycle in one of the most comprehensive studies so far reported[31]. The main problem is that the heat must be transferred to the working fluid through the walls of a cavity that must also act as a pressure vessel at the operating temperature; in the turbojet, the heat is produced locally by combustion, and the walls of the combustion chamber can be cooled by an airflow. It was judged that, for the present at least, the associated materials problems will enforce a return to lower values of T_i, reducing cycle efficiency.

In the Rankine cycle[31], the potassium is vaporised by the solar energy before being passed to a conventional turbine (Fig 13). The vapour from the turbine is then liquified in a radiator, before being returned to the heater by an electromagnetic pump. A very considerable amount of experience already exists with such systems, gained mainly through liquid-metal breeder reactor programmes. For example, inlet temperatures of 970°C can be handled with turbine materials at present available, and turbine tests have accumulated over 10000 hours of running, as has a 240 psi feed pump that will operate at 760°C. Turbines of 32 MW have been developed; they could be adapted to the SPS project.

An SPS configuration that could employ the Rankine system is depicted in Fig 5. It consists of an array of 16 modules covering an area of 119 km^2 and having a mass of 81000 tonnes[31]. Each of the modules would have 36 turbo-generators clustered around a cavity absorber illuminated by 7250 reflectors, each of 1000 m^2 area. A 120 m diameter compound parabolic concentrator at the cavity aperture allows the use of flat reflectors, which require no active orientation.

Each of the 16 modules would consist of a focal point assembly, cavity support arms, and a concentrator composed of fixed facets. The latter would be made from aluminised 3μm thick Kapton film, with an average reflectivity over 30 years of at least 0.9. Such a module is also illustrated in Fig 5.

The overall concept appears technically attractive, but Boeing estimated that its efficiency would not compensate for increased costs. They concluded[31] that such a system would be 5-10% more expensive than the equivalent photovoltaic type, so chose the latter for further study. This view has been endorsed by NASA[33,48], although most organisations working on SPS systems continue to take an interest in heat engine techniques as viable alternatives, should severe difficulties be encountered in the development of low cost, annealable solar cells.

2.3 The use of nuclear energy

In recent years, many environmental and safety objections have been raised to the construction of nuclear power plants, despite their unsurpassed record for safe operation and minimum environmental impact. Whilst most of these objections appear to have had little foundation in fact, their political influence has been considerable, and it has become increasingly difficult to obtain authorisation for the construction of new nuclear plants, particularly in the USA and in some European countries.

The objections centre on a number of technical points, some of which may be summarised as follows:

(i) A nuclear accident could be disastrous, devastating huge areas of a country.

(ii) The waste heat from the reactor causes unwanted thermal pollution.

(iii) Disposing of radioactive products, derived from both the reactor core and the structure, is a major problem.

(iv) There is a significant possibility of terrorists interfering with the reactor or its fuel supply, perhaps diverting fissile material for their own use.

Of course, other items could be added to this list, but these do indicate that siting any new reactor is likely to pose severe problems.

One solution to these problems that has been advocated by some proponents of nuclear power is to place the reactor in geostationary orbit, using a microwave beam to transmit the generated power to the ground. This would certainly resolve most of the above difficulties, but others, no less serious, would replace them. Obviously, the most important doubt concerns the launch into orbit of the fissile material required for the core of the reactor. Although not particularly difficult to solve from a technical point of view, this would present major political problems, and it seems unlikely, at the present time, that these could be overcome, especially as viable non-nuclear alternatives exist. In addition, there would be extreme reluctance on the part of most governments to allow large reactors, producing gigawatts of power, to orbit over their countries, following the uncontrolled re-entry of the Russian Cosmos 954 nuclear-powered spacecraft over Canada[49].

For these reasons, it seems very unlikely that nuclear powered geostationary satellites will be developed for many years, although, it must be added, smaller nuclear reactors are being seriously considered for propulsion purposes[50,51] and for powering orbital weapons systems[52]. The same reservations apply to these, and their future cannot be regarded as certain. Nevertheless, for completeness a few published nuclear systems are considered briefly below.

An altogether different concept, that might well involve a nuclear power source, is that of the power relay satellite. This idea has been proposed to allow power stations to be sited well away from centres of population, for safety or environmental reasons, whilst avoiding the costs of long-distance power transmission via cables. It has been suggested that the power should be transmitted up to an orbiting spacecraft via a microwave beam, then reflected back to the user, who could be situated many thousands of kilometres from the power source. This concept is also reviewed below, where it is concluded that such schemes are too inefficient to be usefully employed.

2.3.1 Nuclear reactors in orbit

That this proposal has been taken seriously is indicated by the appearance of a number of publications reporting relevant studies[18,53]. In general, the aims of these studies have been identical to those of the conventional SPS concepts - the design of a fail-safe, highly efficient power production device, capable of trouble-free operation for 30 years with the minimum of maintenance. From a technical viewpoint, the use of a fast breeder system seems desirable, and many of the developments under way for terrestrial power stations could probably be applicable to space deployment. Apart from the advantages already mentioned of such deployment, a further one, of some significance, would be the elimination of much of the reactor shielding at present built into power stations. Only the shielding needed for sensitive components and maintenance personnel protection would be retained.

A recent design is shown schematically in Fig 6, where it will be seen that, for a 5 GW system output, it is much more compact than competing SPS devices (see Fig 2)[18]. It might also be considerably lighter, one mass prediction being 19700 tonnes, the 5 GW Grumman SPS being, for comparison, 27200 tonnes[9]. Basically, the nuclear system consists of 26 self-contained detachable modules, each capable of generating 336 MWe, and producing a total of 7.85 GWe for supply to the remotely situated antenna. The reactors employed are high-temperature gas-cooled breeders, which convert U238 into fissile plutonium. Each of the modules includes a reactor heat source, a Brayton cycle power generation system, a fuel re-cycling plant, and a waste heat radiator.

The large distance between the power production system and the antenna was included to minimise shielding requirements, whilst keeping radiation doses within acceptable limits at the antenna, where the bulk of the maintenance tasks are expected to occur.

To maintain the stated output, a supply of 8 kg per day of fresh fuel is required; about 1.2 kg of this must be supplied from the earth, the remainder coming from the reprocessing plant, which operates automatically. The unwanted fission products, amounting to 1.5 kg per day, would be stored, and would eventually be disposed of by sending them into deep space.

The reator cores are cooled by high-pressure helium, which also serves as the working fluid for the Brayton cycle turbines. The helium, after passing through the turbines, is cooled in a heat exchanger, the waste heat being transferred first to an organic coolant, then to a large area radiator. It should perhaps be pointed out that this concept suffers from the same major disadvantage as the other heat engine proposals discussed above, namely the problem of obtaining a low enough T_f so that a reasonable cycle efficiency is achieved. This can only be accomplished by using a very large and heavy radiator system, as indicated by the mass breakdown in Table 2.

Table 2

Mass breakdown of 5 GWe nuclear power system[18]

(per 336 GWe module)

Component	Mass (tonnes)	Proportion (%)
Reactor system	75.8	10.0
Centrifugal separator	8.2	1.1
Brayton system	150.0	19.8
Fuel processing plant	39.0	5.2
Heat rejection system	457.0	60.4
Nuclear shielding	26.0	3.5
TOTAL	756.0	100.0

It is clear that the heat rejection system, which consumes over 60% of the mass, is crucial to the overall cost. Its mass cannot be reduced, whilst maintaining efficiency, unless T_i can be increased, allowing T_f also to increase. However, materials problems again prevent easy access to such a solution. Already, in the design described, the value of T_f is very high, 1022°C, causing the efficiency to be relatively low, and the upper temperature, 1317°C, is dictated by the physics and metallurgy of the reactor core. The latter operates at a power level of 1088 MWt, so the overall efficiency is only about 30%; degrading this further to reduce radiator mass, by operating at a higher T_f , would probably not be acceptable.

The reactor itself is cylindrical, with both length and diameter 2.4 metres. Its volume is inclusive of radial and longitudinal ducting provided to allow the helium cooling gas to carry away the heat generated in the pebble-type core. The peak core temperature is 1950°C, well below the melting point of the ceramic pebbles, 2800°C. The helium pressure drop is from 68 to 64.6 atm and a flowrate of 711 kg/s is needed. The whole concept is extremely compact. Control is achieved by means of axial boron carbide control rods, 18 being used.

Considerable design effort has been devoted to the other major components of the system, notably the fuel reprocessing plant, the Brayton cycle generator, and the heat rejection subsystem. A great deal of terrestrial experience exists in all these areas, and there appears to be no technical reasons why such a system should not operate as planned. For example, Brayton cycle demonstrations have reached 26000 hours, impressive reliability being demonstrated[52].

It can be concluded from such studies that existing technology could provide a most attractive orbiting nuclear power source, despite the relatively low efficiency likely to be achieved. As well as being smaller and of lower mass than a photovoltaic SPS, it would have the further advantage of providing a continuous output, with no interruptions due to eclipse or shadowing by neighbouring spacecraft. However, despite such a favourable impression, further studies and development do not appear to be contemplated at the present time, all available funds in the USA being devoted to refining photovoltaic SPS designs. This is inevitable in view of the adverse reaction, throughout the world, to nuclear systems in the recent past. In this climate of opinion, it would perhaps be foolhardy to adopt any other course of action.

2.3.2 Power relay satellites

The power relay satellite, which was originally proposed by Ehricke[30], has also been considered seriously by NASA[54], amongst other organisations, but it does not appear to have received any appreciable support. As already stated, its main aim is to allow the transmission of power from a remote power station to a user community or industry, without employing cables. In the simplest system, a microwave beam would be produced by an antenna situated at the power station. This beam would be transmitted upwards to a relay satellite, probably in geostationary orbit, from which it would be passively reflected to the user. A ground rectenna would be necessary to convert the microwave power back to a usable electrical grid output.

Thus this system consists basically of the SPS power transmission components, with a passive reflector added. It is, therefore, far less ambitious than the SPS ideas already referred to, and could perhaps be accomplished for a much lower R & D cost and capital outlay. For instance, it is possible that the reflector could be deployed using only the Space Shuttle for transportation, because the mass would be about 60 tonnes per km^2 of area[30]. Thus a new, large payload transportation system would not have to be developed.

A typical configuration is shown in Fig 7. It consists of a simple rectangular framework supporting the reflector, which is formed from wire mesh. It has been shown that a mesh made of wires of 0.1 cm diameter and spaced at 0.4 cm intervals will reflect 99.9% of the power contained in a 3 GHz microwave beam. Thus the reflection losses will be negligible. The only other component required[30] are electric propulsion modules to counteract the radiation pressure of the microwave beam and to provide attitude control. It is likely that the microwave pressure will be many times that of solar radiation, but the power consumed by the thrusters, which would be obtained from the beam itself, would amount to only about 0.02% of the incident power, in one case analysed in detail. For the same case, involving a reflector of 0.4 km^2 area and a 12 GW microwave beam, the propellant consumption would be 34 tonnes per year.

The efficiency of the overall system could be quite high, perhaps reaching 68%. Such a value[30] would be achievable if the RF production was at 90%, the up and down beam transmission 95%, and the collection and reconversion 85%.

034

One of the major reasons for proposing this system was the ever-increasing shortage of land for power stations in areas of large population density. It was claimed that this difficulty could be alleviated by using the power relay satellite, thus assuming that the land area required for the rectenna would be much less than that for the primary power station. This assumption was based on a further premise, this being that the microwave beam can be shaped so that, after reflection and transmission back to the earth's surface, it can be confined to the dimensions of the rectenna in question.

It appears, on closer examination, that a number of factors were not adequately considered in the original proposals. Of these, the two most important are the limitations to microwave power in the ionosphere and the likely maximum power levels to which the public and workers are to be exposed. With regard to the former point, the present consensus of opinion is that ionospheric power density levels should not exceed[7,33] about 23 mW/cm^2. The latter point, concerning safety, is currently being debated in many countries; the likely outcome will be a limit of 0.01 mW/cm^2 for continuous exposure[55,56].

The limitation on power flux in the ionosphere means that, for a significant amount of power to be transmitted, the upward going beam must be of large diameter, around 10 km, shortly after leaving the antenna. Consequently, the antenna must be of comparable diameter, or the beam must diverge very rapidly. In the latter case, the relay satellite would need to be of huge dimensions, rendering it uneconomic. Similarly, restrictions on ionospheric power levels preclude the use of smaller rectennas than included in SPS designs, which are of about 10 km diameter at the 5 GW level. In addition, they must be surrounded by very large guard areas, to which access must be restricted, for safety reasons. The guard areas must surround all land subjected to power levels greater than the stipulated safety value, with an additional allowance for beam drift. The total land requirement can be as high as 500 km^2 at the 5 GW level at high latitudes.

These arguments appear to destroy the case for the power relay satellite. Only if these limitations are relaxed very considerably, and this is extremely unlikely, could this concept prove to be an economic proposition. In addition, it has been pointed out[54] that the mechanical surface tolerance required for the satellite would be about 1 mm, and that a mechanical pointing and stabilisation accuracy of 1 second of arc would be needed. These are not possible with today's technology; of course, comparable specifications exist for the photovoltaic SPS, but they can be achieved by electronic means.

2.4 Laser power transmission

Before concluding this discussion of orbital power systems, it is worthwhile to consider in a little more detail the possible methods by which power can be transferred between a spacecraft and the ground, or in the opposite direction. The technique chosen is absolutely crucial to the success of any scheme. In particular, it must be able to operate in all weather conditions, it must not adversely influence the environment, it must be fail-safe, and it must provide a high level of efficiency.

Only two methods appear to be available; microwaves and lasers. Of these, only the microwave technique has been shown to be acceptable on all grounds. The only reservation is in the field of RF interference[57], where much extra work may be required, especially if the stringent needs of radio astronomers are to be met[58].

The competing system would employ an intense laser beam to transmit energy from an SPS to a ground station[45,59,60]. Such intense beams have also been proposed for other applications; examples are for propelling aircraft using power distributed from an SPS via relay satellites[61], or directly[62], and for propelling rockets, using ground-based lasers[63]. However, from the comparison of the two systems presented in Table 3, it will be seen that the efficiency of the laser concept is likely to remain very low, largely due to atmospheric absorption (see

Table 3

Comparison of microwave and laser power transmission concepts[25,59]

	Microwave system	Laser system
Typical wavelength	12.2 cm (2.45 GHz)	0.5 to 10.6 μm
Device	Amplitron, klyston	Excimer (0.5 μm) Closed cycle CO (5 μm) Closed cycle CO_2 (10.6 μm)
Power, efficiency - 1960	1 kW, 10%	Watts, 1%
(per device) - 1980	100 kW, 40%	7-20 MW, 40-50%
- 1990	1 MW, 85%	~1 GW, 50-70%
SPS system efficiency	60%	5-10%
Focussing dia. on ground	Good, 10 km dia.	Excellent, 5.4 metres at 0.5 μm, 54 metres at 5 μm
Rectification efficiency	~90% at 2.45 GHz	Low
Weather dependence	Negligible	High. Up to 80% absorption, CO_2 laser, in clear weather.
Aperture dia.	Large, ~1 km	Small, 3-10 metres
Pointing accuracy	10^{-6} rad, (200 metres)	10^{-8} rad, (10 metres)
System cast ($ per Watt)	15-25	15-25?
Life	~10 years	~1 year?
Power density - transmitter	2.5 W/cm^2 maximum	10^3 W/cm^2
- receiver	23 mW/cm^2 maximum	10^3 W/cm^2
Safety	High	Low

(see Fig 14) and the poor conversion efficiency at the ground station. There is a distinct possibility that the conversion efficiency on the SPS, from dc power to laser radiation, can be made very high[59], direct conversion from sunlight to laser energy having been seriously proposed, but this would not overcome other system inefficiencies.

The projected power levels of future closed-cycle CO lasers can reach 1 GW[59], with costs falling in the range below $0.3 per watt. These predictions are attractive, but they concern technology that does not exist, even in a terrestrial form. For purposes of credibility alone, an SPS design produced at the present time could not include such a system. In addition, it should be pointed out that the power density in the laser beam would remain a serious problem. A value of 10^3 W/cm^2 would allow the receiving system to be extremely compact, but it might well be unacceptable for safety reasons. Certainly, other spacecraft or aircraft passing through it would be put at risk; indeed, such laser beams are now being investigated for use as weapons[64]. An extremely reliable fail-safe system would have to be evolved to counter worries concerning the beam moving over the earth's surface due to SPS attitude control inaccuracies or failures.

On balance, most recent studies of these possibilities have concluded that the microwave technology is more advanced, more efficient, and intrinsically safer. It has therefore, in all cases, been selected for baseline designs, including that recently adopted by NASA[33] and by NASA/DOE[13,45].

3 TRANSPORTATION REQUIREMENTS

All the studies of possible SPS systems that have so far been published have identified the development of low cost transportation systems as crucial to success. Although the present Space Shuttle is a first step in the right direction, an order of magnitude reduction in the cost of launching payloads into low earth orbit is a minimum requirement[65], and actual payloads carried on each flight must be increased by a factor of between 10 and 20 from the current 29 tonnes[19]. These requirements can only be met by the attainment of complete re-usability[11], the further development of propulsion and structural technology[65], and the achievement of easy maintainability and rapid between-missions turnaround. It is perhaps also worth pointing out that a large payload volume is also necessary, but that limitations[11] here indicate that an SPS be built in orbit; within the constraints of forseeable technology, it is not possible to construct either the complete satellite or significant parts of it on the ground prior to launch into LEO.

Bell[65] has pointed out that considerable advances should be possible in propulsion technology, because, with the exception of the Shuttle, little effort has been devoted to this field in western countries since the mid-1960s. Similarly, considerable benefits should result from further work on structures. He has suggested that the following aims should be kept in mind in developing a heavy lift launch vehicle (HLLV) for applications such as the SPS:

(a) All hardware should be completely re-usable; a NASA aim has been quoted as 300 to 500 flights[40]. Any expendable hardware will have a large adverse influence on costs. For example, the 20000 lb interstage structure in a Boeing proposal would cost $2M per launch if not re-used.

(b) All system hardware must be designed for fast operational turn-around, preferably of less than 1 week.

(c) Propellant costs must be minimised. At the present time, this would indicate that the first stage should use hydrocarbons or ammonia, but the situation may well be very different in 20-30 years, because supplies of fossil fuels will, by then, have become much more expensive.

(d) Hardware attrition rates must be low (comparable to manned commercial aircraft).

(e) Unfavourable environmental impacts must be minimised.

(f) Payload volumes and masses should be consistent with the most ambitious projects, such as the SPS. Masses usually quoted are in the range 250-500 tonnes and a typical volume requirement[66] is 70 kg/m^3. In fact, it has been stated that the HLLV must be designed specifically for the construction of an SPS system[67].

The scale of the HLLV project is indicated by the fact that 400 launches would be required to support the construction of a single 10 GW SPS[33]. The lift-off mass of this vehicle would be about 11000 tonnes and the first stage would have a landing weight of roughly 935 tonnes, approximately three times that of a Boeing 747. The second stage would land at 440 tonnes, assuming that both were winged and that the first stage was equipped with auxiliary air-breathing engines.

Equally as important as the HLLV is the propulsion technique for transporting massive loads from LEO to geostationary earth orbit. In fact, amongst others, Marshall SFC has stated that the cost of this process is vital to the acceptability of an SPS system[48]. The method adopted also has a fundamental bearing on the SPS construction site and on the construction techniques used. For example, large, conventional rocket motors could be used to transport materials and

034

constructional machines to GEO, if it was decided to build the satellite there. However, such rockets could not be employed to propel large, flimsy structures from LEO to GEO, unless their strength was much greater than required for their ultimate use.

There have always been two competing methods available to perform this function, conventional rocket motors and electric thrusters. The former have the advantages of proven technology and short transfer times, of the order of hours, whereas the latter require orders of magnitude less propellant, but large quantities of electrical power and mission times of 100-300 days. Another disadvantage of electric propulsion (EP), also associated with the long transfer times, is the degradation of the solar arrays used to power the thrusters, owing to the damage caused by energetic particles in the Van Allen radiation belts[68,69]. In addition, there is a significantly higher risk of collision with other orbiting objects, due to the longer time spent in LEO[66].

Both propulsion techniques have been considered seriously since the beginning of SPS studies. Although some earlier reports recommended the use of EP[70], a clear cost advantage demonstrated in a number of detailed comparisons[43,66,71] did not always, at first, lead to an endorsement of these conclusions. However, as ion thruster technology advanced, all subsequent proposals advocated the use of EP for this most important orbit transfer phase of the mission. It has been estimated[42] that $1.2B can be saved per satellite by using this technology.

The two concepts now in favour are as follows[33,48]:

(i) Marshall SFC/Rockwell advocate construction of the spacecraft in GEO, using a crew of 500 or more astronauts. Constructional materials would be carried to GEO by a large electrically propelled cargo vehicle.

(ii) Johnson SFC/Boeing propose that the satellite be constructed in LEO in large sections. Each section would then be fitted with banks of ion thrusters for propulsion to GEO, using power from the satellite's own solar cells. The latter would be annealed on reaching GEO[11] to allow the performance lost in traversing the Van Allen radiation belts to be regained.

It is understood[72] that the NASA/Department of Energy reference system will combine features of both of these systems. A satellite measuring 5.3 × 10.4 × 0.5 km has been selected, producing a final output power, at the ground rectenna terminals, of 5 GW. In design, it is effectively one half of the earlier Boeing proposal[7,32] (Fig 12), but with GEO construction. A vital feature is the use of EP for transportation.

034

In considering the complete SPS transportation system, two additional elements must be included, both concerned with carrying astronauts and their supplies to their work stations. In nearly all concepts, men are required in both LEO and GEO, the major variable being the number needed in each orbit. In particular, perhaps 480 to 700[33,71,73] will be needed at the construction site at any one time. In addition, assuming that a complete SPS system is in operation, a repair crew totalling about 240 astronauts may be needed, plus a GEO refurbishment crew of another 240[74].

It is generally accepted that these astronauts can be transported to LEO by an uprated Shuttle, carrying 50 to 80 passengers[66,75]. To carry them to GEO a newly-developed vehicle will be required. This must be powered by conventional high-thrust rockets to give reasonably short transfer times. It must be completely re-usable, and would preferably be designed to work only in the space environment. A typical concept is capable of carrying 75 passengers with supplies for 90 days, is equipped with engines burning liquid oxygen and liquid hydrogen (LO_2/LH_2), and has a mass of 560 tonnes at the start of its mission[33].

4 TRANSPORTATION TO LOW EARTH ORBIT

Although the present Space Shuttle has been designed with a particular configuration[19], with refurbishable solid boosters and a winged, horizontally landing orbiter, the vastly increased capabilities required of an HLLV imply that all possible concepts should be re-examined very carefully before a decision is taken to proceed to full development. Issues that need to be resolved include the following:

(i) The number of stages to be employed.

(ii) The configuration of each stage; this mainly concerns the choice between the ballistic and the winged options, and whether vertical or horizontal landings and take-offs should be employed.

(iii) The types of engines to be used. Possibilities here include pure rocket motors, air-augmented rockets, ram-jets, and auxiliary air-breathing engines for landing manoeuvres.

(iv) The fuels to be used.

Factors influencing decisions concerning the various possibilities must include:

(a) Cost of development, procurement, operation and maintenance.

(b) Assumptions concerning available technology at the time of commencing development.

(c) Safety.

(d) Cross range capability required for landing. This will be heavily dependent on the geography of the launch sites available.

(e) The need to avoid adverse environmental effects.

To these must be added the payload and re-usability requirements discussed in section 3.

Many organisations in the USA have studied these options in great detail; they include Boeing, the Lyndon B. Johnson Space Center, Martin-Marietta, North American Aviation, Rockwell and the University of Houston, together with notable individuals, such as Philip Bono of Douglas. Although no concensus of opinion has been reached, NASA has selected for its baseline SPS system a two-stage winged HLLV using methane and LO_2 in the first stage and LH_2/LO_2 in the second[33,48]. This follows closely the choice made by Boeing[11]; an outline diagram of this vehicle and an artist's impression of its vertical lift-off are shown in Fig 15. However, in view of this lack of general agreement, it was decided to reconsider the possibilities, with a view to recommending a baseline design for further UK studies of SPS systems.

4.1 Number of vehicle stages

For many years, a major goal of space technology has been the development of a single-stage-to-orbit vehicle. Repeated studies have shown that this is on the border-line of technical feasibility[65,76], but the propellant fraction required is so large that development risks would probably be judged unacceptable. It has been shown[77-79] that a low hypersonic lift-to-drag ratio configuration should be viable as a single-stage-to-orbit HLLV, provided that engine thrust to weight ratios can be improved, and that an altitude compensating nozzle can be developed. The use of expendable propellant tanks, as on the present Shuttle[19], would minimise development risks[78,80]. Air-augmented propulsion is also possible[78], as is the mixed-mode propulsion concept[76]. In the latter, two different fuels are burnt sequentially in the same engine; the use of a hydrocarbon, such as RJ5, together with LH_2, would allow the effective density of the propellant to be more than doubled, considerably reducing the size, mass and cost of the vehicle.

Proposed single stage vehicles have included both ballistic and winged types. Typical of the former are Bono's ROMBUS concept[77], shown in Fig 16, which employs jettisonable LH_2 tanks, and North American's air-augmented design[78], shown in Fig 17a. ROMBUS has a lift-off mass of 6.4×10^6 kg and a payload of 450 tonnes. Without air-augmentation (see section 4.3), the lift-off mass of the North American design was put at 13.6×10^6 kg for a 450 tonnes payload; air-augmentation would probably reduce this mass by 30%.

A single stage winged vehicle has been proposed by Boeing[81], with a lift-off mass of 3.5×10^6 kg and a payload of 114 tonnes. It is shown in Fig 17b. It required a dual fuel propulsion system[76], burning a hydrocarbon fuel for lift-off and transferring to LH_2 at an intermediate altitude. NASA Langley have recently proposed[82] a single stage winged concept using hybrid ramjet/rocket propulsion. This could deliver a payload in the range 20-40 tonnes, for a lift-off mass of 1.03×10^6 kg.

Although there seems little doubt that single stage vehicles could be developed, the multi-stage approach seems to be more easily justified at present, in that it is based on a vast background of past experience. In particular, the Shuttle and Saturn V developments are particularly relevant, and give every confidence that success can be achieved with no great extension of current technology.

Most studies have concentrated on two-stage systems, which are relatively simple, yet offer considerable payload gains. An additional advantage is that it is relatively easy to change propellants part of the way through the flight, at first stage separation, although, with two independent vehicles, guidance and control become more complex after separation.

Several different options are available for a two-stage system; both can be either ballistic or winged, or the orbiter can be winged, whilst the booster is ballistic. The Space Shuttle[19] comes within the latter category, whereas the Russian equivalent[83] is similar to the USAF/Boeing X-20 Dyna-Soar principle, with both orbiter and booster winged. As already mentioned, NASA at present favour the use of winged vehicles, as depicted in Fig 15; this is to achieve a large cross-range during re-entry, to permit maximum operational flexibility[84].

A typical two-stage ballistic vehicle, with a low lift-to-drag coefficient, is shown in Fig 18, and estimated masses are given in Table 4[65]. This vehicle has a 450 tonnes payload and uses different propellants in the two stages. Operationally, the first stage coasts ballistically until re-entry, when the

Table 4

Two-stage low lift-to-drag launch system

Item	Weight (lb)
Gross lift-off weight	20906000
First-stage lift-off weight	14992000
First-stage propellant	13277000
First-stage at separation	1725000
First-stage landing propellant	112250
First-stage at touchdown	1612750
Second-stage gross (including payload)	5904000
Second-stage ascent propellant	4095000
Payload delivered	1000000
Landing propellant	40000
Second-stage at touchdown	769000

offset centre of gravity, resulting from locating the landing propellants in laterally offset tanks, enables the base to be trimmed forward to a low lift-to-drag attitude. Roll modulation is then used to reach the correct landing site, and retrorockets are fitted to allow a soft landing to be achieved. The second stage also uses retrorockets to initiate its descent to the re-entry point, from which the same procedure is followed as was carried out by the first stage.

A major problem with the above proposal is that of returning the re-usable first-stage to the launch site; this requires the acquisition of a down-range landing site, and the cost and delay of transporting a huge vehicle back over several hundred miles. However, this can be avoided by employing the retro-lob manoeuvre[84], in which, soon after separation of the two stages, the velocity vector of the booster is rotated through a large angle for re-entry along a trajectory that will take it back to its launching site. This procedure is illustrated in Fig 19.

A Boeing configuration, although identical in principle, is somewhat different in detail, as shown by comparing Figs 18 and 20. The Boeing HLLV is designed around a requirement for a payload mass to volume ratio of 70-75 kg/m^3 for a total payload of 391 tonnes[66,73] and a lift-off mass of 10^7 kg. Masses of the various components and propellant loads are also included in Fig 20. This design resulted from a detailed study of a ballistic vehicle with payload mass to volume ratios of 20-100 kg/m^3 and a payload of 272 tonnes[43], but having similar general characteristics.

The two-stage winged option advocated by Boeing is shown in Fig 21. It is a series burn, vertical take-off, horizontal landing vehicle with a payload of 380 tonnes and a take-off weight of 9.6×10^6 kg[7,43]. Such a design provides significant cross-range for both stages, typically ±2500 km perpendicular to the flight path on re-entry[84], and it could provide a go-around landing capability if equipped with air-breathing engines. One of the latest versions has been so equipped[33,85], and the payload has been increased to 424 tonnes; this configuration is depicted in Fig 15.

Two-stage horizontal take-off winged vehicles have also been proposed, but these would require very long, thick runways, and air-breathing propulsion would probably be essential for take-off. It is probable that only low to medium payloads could be carried, so such vehicles could not perform the functions of an HLLV[75].

Of course, multi-stage vehicles are not limited to two stages; in fact, present day missions usually require three, and sometimes four. The HLLV is no exception, and a number of designs have been investigated involving three or more stages. Both parallel and series burns provide advantages. In a parallel burn system[65], liquid propellant engines can be ignited and checked out before lift-off and, potentially, fewer engines are required on the integrated vehicle. Then multiple staging gives a reduced lift-off mass for a given payload and orbital objective.

Fig 22 depicts a Rockwell concept[65] that combines features of both techniques. In this, all engines are burning at lift-off, with propellants being crossfed sequentially from sets of pairs of opposed boosters into the final core stage, which is shown in two sizes. Booster pairs are separated at propellant depletion; consequently, the core vehicle plus the six boosters constitutes a four-stage HLLV, giving a low lift-off mass for a given payload, at the cost of additional complexity. The masses of the different components are given in Table 5.

The boosters are equipped with folding wings and air-breathing engines. They thus have considerable cross range capability, and can fly back to the launching site. The core vehicle, after delivering its payload, re-enters base first, and uses retrorockets for a soft landing. The air-breathing engines on the boosters are also employed to augment thrust during lift-off.

Table 5

Parallel burn, crossfed launch system (Rockwell)

Item	Weight (lb)
Gross lift-off weight	13230000
Individual booster gross	1466333
Individual booster propellant	1215066
Individual booster at separation	251267
Total six boosters gross	8798000
Core stage gross (including payload)	4432000
Core stage ascent propellant	3200150
Payload delivered	600000
Earth return propellants	75700
Core stage at touchdown	556150

4.2 Vehicle configuration

Many studies have concentrated on attempting to make the choice between winged and ballistic vehicles, and between vertical and horizontal landings and take-offs. As already mentioned above, the last point is easily resolved, vertical take-offs being preferred for all large payload devices[75]. Excluding hybrid arrangements, such as the present Space Shuttle (ballistic boosters and winged orbiter[19]), the options available are shown diagrammatically in Fig 23, together with typical payloads, lift-off masses, and the names of organisations studying them[86]. Both single and two-stage concepts are included for completeness.

As pointed out previously, NASA has selected a winged configuration for further studies of a baseline SPS system, following parallel investigations by Johnson SFC/Boeing and Marshall SFC/Rockwell[48]. One of the major reasons for this decision was that the large cross range capability of the winged vehicle allows horizontal landings at the launch site, whereas it was assumed that a ballistic booster, and probably the orbiter would have to be recovered at sea[11]. The latter procedure would be most costly, for several reasons, and turn-around time would probably be much greater. However, as has already been mentioned, the retro-lob technique allows a ballistic booster to soft-land at its launch site, obviating these difficulties[84]. Moreover, the limited cross-range capability available, about 200 km as compared to 2500 km, should be no great disadvantage, even with present day guidance and control methods, which already provide adequate accuracy[84]. There can be no avoiding, however, a loss of operational flexibility, due to the lack of a landing go-around capability and less choice of re-entry times.

The ballistic vehicle has significant advantages, especially concerning structural weight and development costs. For a ballistic HLLV, 92-94% of the unloaded mass would be propellant, whereas this figure would be reduced to 85% for a winged concept. This is due to the greater structural complexity, and would be further reduced to about 70% if air-breathing engines were fitted. It should be noted, however, that the safety advantages of a go-around capability would be absent if these engines were omitted. It has been shown that the development cost of the winged option would exceed that of the alternative by about 20%; the respective figures, for payloads of about 380 tonnes, are $7.6B and $9.1B [43]. Similarly, the production cost of the ballistic vehicle is 11% cheaper than that of the winged device, despite the assumption, in this analysis, that the former must be recovered at sea.

A possible criticism of a soft-landing ballistic vehicle, using retro-rockets, is the amount of fuel likely to be consumed during this process. However, this will probably be small, perhaps 8 tonnes for the vehicle depicted in Fig 18, because most of the kinetic energy is lost in atmospheric drag[84]. This is possible because the weight per unit cross-section area of the base is low during re-entry. Thus deceleration occurs at higher levels in the atmosphere, when compared to the more streamlined winged orbiter or booster, and there should also be less ablation to be allowed for, leading to lower costs.

There is a further factor in favour of ballistic configurations, and that relates to vehicle volume. It is much easier, in such devices, to provide a large payload volume, and the choice of propellants for the first stage is more open than with winged alternatives. In fact, it is probably not possible to use LH_2 for the first stage of a winged vehicle, owing to its bulk, despite the fact that this propellant provides the highest specific impulse[65].

The above advantages and disadvantages of the two main concepts are summarised in Table 6. The hybrid configuration, represented by the Shuttle, is not included, because it has the disadvantages of both types, in particular the recovery problems of ballistic boosters and the high development cost of a winged orbiter. Only a two-stage vehicle is considered in each case, section 4.1 having indicated that this is the least complex system likely to be able to perform the mission adequately.

034

Table 6

Comparison of characteristics of ballistic and winged HLLV concepts

Characteristic	Ballistic	Winged
Payload capability	At least 500 tonnes	At least 500 tonnes
Lift-off mass for 380 to 390 tonnes payload[43]	10.5 × 10^6 kg	9.6 × 10^6 kg
Payload mass/volume ratio[43]	20-100 kg/m^3 (typically 75 kg/m^3)	Typically 136 kg/m^3
Cross range capability[84]	±200 km	±2500 km
Propellant mass ratio (zero payload[84])	92-94%	85% (70% with air-breathing engines)
Propellant choice	Unlimited	Probably excludes LH_2
Go-around capability	None	Possible, if equipped with air-breathing engines
Operational flexibility	Limited re-entry windows	Re-entry windows extended by glide ability.
Landing site[84]	Launch site for both booster and orbiter, if retro-lob technique used.	Launch site for both booster and orbiter.
Landing mode	Vertical, using retro-rockets, both components.	Horizontal, both components
Noise problem - lift-off	Large	Large
- landing	Large	Small
Sonic boom problem	Large	Large
Landing fuel requirement	Few tonnes	Zero, if glide approach
Turn-around time	Excellent, if retro-lob technique used	Excellent
Re-usable life	Excellent potential	Excellent potential
Re-entry heating problems	Minimum - small mass per unit area	Severe
Mating problems	Difficult	Severe
Pollution	Low, if LH_2/LO_2 used for both stages	Potentially severe if using hydrocarbons
Development cost (380 to 390 tonnes payload[43])	\$7.6B	\$9.1B
Production cost[43]	\$974M	\$1081M
Cost per launch[43] (380 to 390 tonnes)	\$7.62M	\$7.93M
Cost per launch[75] (300 tonnes)	\$4.3M	\$3.6M
Propellant cost per launch[43]	?	\$2M
Propellant cost per launch[75]	\$790K	\$700K

It has been concluded from Table 6 that, notwithstanding the decision made by NASA, that the two stage ballistic concept is superior, particularly if the retro-lob technique allows a soft landing of the booster to be made at the launch site. It also enables LH_2 first stage propellant to be employed, which could prove to be a distinct advantage in the SPS timescale, owing to the possibility that supplies of kerosene and other natural hydrocarbon fuels may, by then, be extremely scarce.

4.3 Propulsion concepts

As for all previous space tasks, rocket motors must be used for the HLLV, although their thrust may be augmented by air-breathing devices during lift-off and in the more dense regions of the atmosphere. It should be noted, however, that the use of atmospheric air will probably enhance the emission of various pollutants, notable nitrogen oxides, and this may not be allowable for environmental reasons[87]. Turbojets or other air-breathing engines may also be used for the landing manoeuvres of winged vehicles[33].

It has been pointed out by Bell[65] that research into rocket engines has stagnated, in the West, for many years, with the exception of the devices being prepared for the Space Shuttle. Several promising areas for technological advancement may be listed, as follows:

(i) An altitude-compensating nozzle capable of maintaining near-optimum expansion of exhaust gases from lift-off to near vaccum conditions.

(ii) Increased density propellants.

(iii) Dual propellant engines, allowing high density, medium specific impulse fuels to be used for lift-off and the initial climb, followed later by high specific impulse, lower density fuels[76].

(iv) Air augmentation of the performance of the basic engine. This can, in theory, enhance effective specific impulse at low altitude.

(v) A lightweight, high energy density, high thrust to weight ratio nuclear rocket, capable of retaining all radioactive material.

(vi) An integrated propulsion system/airframe configuration designed to fully realise the benefits of all technological advances. This should result in a considerable weight saving, particularly if composite materials are also used in appropriate areas.

Other aims can be added to the above, including, for example, the development of an annular combustion system in which ram air from the forward motion of the vehicle assists in properly shaping the rocket's exhaust plume to give high efficiency and minimum pollution[84]. A further requirement is the attainment of times between overhauls similar to those achieved by aircraft engines.

Item (iv) above is a particularly valuable concept in designing single stage vehicles[77,78]. Two schemes devised by North American Aviation[78] are illustrated in Fig 24, one involving an external-burning ramjet augmented configuration. In both cases, combustion is in an annular region surrounding the base of the booster, which also serves as a re-entry heat shield. A different type of augmentation system, being developed by Rockwell[65], is shown in Fig 25. This can, it is claimed, substantially increase thrust from lift-off to at least Mach 4. At lift-off, fuel-rich primary rocket motors induce an airflow through the annular duct shown in Fig 25. Downstream of the rocket exhaust nozzles, the excess fuel is burnt in this airstream, and the heated gas expands against the plug nozzle boattail of the vehicle. As velocity increases, the excess fuel flow is modulated to match the increase in the available air supply, the system then operating in a conventional ram rocket cycle.

Unfortunately, these methods of enhancing the performance of rocket motors will probably increase the production of oxides of nitrogen, owing to the unavoidable presence of this gas in the high temperature combustion regions. As will be pointed out later, these oxides probably represent the most serious[87] atmospheric pollutants derived from rocket motors (section 6.3.3), and every effort should be made to reduce their production rates. Thus these techniques may not be available to the HLLV, unless future work shows them to be acceptable from this point of view.

Environmental considerations are also likely to prevent the adoption of the NASA Langley concept[82] of a hybrid rocket/ramjet propulsion for a single stage vehicle. With a lift-off weight of 1030 tonnes, this would deliver a payload of 20 tonnes using fan ramjets, or 40 tonnes with supersonic combustion ramjets. The latter proposal would require a total airflow collecting area of 50 m^2.

The mixed-mode rocket motor[76], operating on hydrocarbons at low altitude, then transferring to LH_2 as the flight progresses, is probably more acceptable on environmental grounds. Its advantages are that it allows the effective density of the propellants stored in the vehicle to be more than doubled, whilst maintaining high efficiency at all stages of flight. In one published design[76,88], these aims are achieved by very conservative means, using an extendable nozzle to increase the expansion ratio from 35 to 200 with the change of propellant, and regenerative LO_2 cooling of the nozzle and combustion chamber walls. The extendable nozzle is basically radiation cooled, and the combustion chamber is made from copper with a steel jacket. The specific impulse attainable is 310 seconds at sea level, burning RJ-5, and 462 seconds in vacuum, burning LH_2. Such mixed-mode motors seem to be particularly applicable to single-stage vehicles; for example, Salkeld and Beichel have proposed[76] a number of different single-stage concepts using this type of propulsion, with payloads of up to 45 tonnes.

The development of a nuclear rocket would provide an attractive propulsion system for many advanced projects. Studies and preliminary development work were undertaken in the late 1950s at Los Alamos for the US Atomic Energy Commission, under the title of the Dumbo Rocket Reactor Project[89]. The design was very advanced; it incorporated a heat exchanger having a very high energy density, a very large surface to volume ratio, and laminar flow. The projected thrust to mass ratio was between 50 and 100, allowing a fully re-usable, winged, single stage vehicle to be produced. The working propellant was to have been hydrogen, and air augmentation was also possible, giving a further increase of performance. Unfortunately, this project was cancelled in favour of the less advanced NERVA system, which, in turn, was discontinued[65]. Even if the necessary funds became available in the future, it is unlikely, however, that the project could be re-started, owing to political and environmental opposition resulting, at least in part, from the recent uncontrolled re-entry of a Russian nuclear-powered ocean surveillance spacecraft, Cosmos 954[49].

It may be concluded from this brief survey of propulsion technology that several advanced concepts are available for significantly increasing the performance of HLLVs, the most radical being the nuclear rocket. However, most of these proposals could lead to severe environmental problems, so very careful preliminary investigations should be undertaken before any of them are selected for widescale adoption. At the present time, it seems advisable to concentrate efforts on the evolutionary improvement of those rocket motors already in service or under development, such as those used on the Saturn launchers and on the Shuttle. This route is probably the most cost effective, the technology base being much more extensive than that of, for example, large ramjets[84]. The thrust levels attainable are clearly more appropriate with large, liquid-fuelled rockets, they have a proven restart capability, and they can be throttled, if necessary, to limit the g forces imposed on crew members. To illustrate what can be done using existing technology, the Boeing proposal[66,73] depicted in Fig 20 utilises the Shuttle's main engines for propelling the second stage. They could also be used for the first stage, in greater numbers, if the LH_2/LO_2 option were to be adopted.

4.4 Propellants

Although solid boosters are to be used for the first stage of the Space Shuttle[19], they were selected only when it was found that the original aim of a completely re-usable system could not be achieved within the available budget. These boosters each provide up to 1.5×10^6 kg of thrust for up to 124 seconds, and would obviously be suitable for many other launchers. However, in common with other solid-fuelled motors, their propellants, after combustion, produce chemical products which are, in large quantities, environmentally unacceptable. For instance, the Shuttle's boosters use ammonium perchlorate* as an oxidiser, with aluminium powder as the fuel, iron oxide as a catalyst, and a polymer binder. In view of the present concern regarding adverse effects of chlorine on the ozone layer in the atmosphere[90], such propellants could not be authorised for massive use without a great deal of additional research to prove conclusively that they will not cause significant environmental damage.

As an example of the adverse effects that may be expected from solid propellants, NASA's second Environmental Impact Statement regarding the Shuttle shows that the chlorine emitted in the rocket exhausts will, for 60 launches per year, decrease the ozone concentration by 0.2%, giving a 0.4% increase in ultraviolet radiation at the earth's surface[91]. Although there is considerable uncertainty about the accuracy of these figures, due to the presence of poorly understood chemical processes and lack of precision in reaction rate values[90], they are a cause for alarm in the context of the massive propellent loads required by an HLLV.

Due to the above reasons, together with the longer turn-around time required by re-usable boosters and the absence of an active throttling capability, all HLLV studies have assumed the use of liquid-fuelled rockets. In general, liquid fuels provide several major advantages, including the following:

(i) Relatively short turn-around time.

(ii) Active throttling capability.

(iii) Restart capability.

(iv) Greatly reduced environmental pollution.

(v) Much improved performance, due to higher specific impulse.

(vi) Reduced operating costs.

034

---

* NH_4ClO_4. Note that Ref 19 is incorrect in referring to aluminium perchlorate.

As an example of the last three items, it has been shown[91] that replacing the solid boosters used on the Shuttle by rockets fuelled with kerosene and LO_2 would increase the payload by 50%, reduce pollutants to H_2O, CO_2 and nitrogen oxides only, and save $1M per launch in 1985. Unfortunately, the development cost of $1.5B is, at present, prohibitive. At the cost of increased dimensions, even larger payloads could be delivered using boosters consuming liquid hydrogen[65].

Most published HLLV design concepts have assumed the use of a hydrocarbon fuel for the first stage and liquid hydrogen for the second, both in combination with liquid oxygen[11,46]. In some cases, the choice of fuel is specified; it is often methane, particular in the later Boeing reports[33,85], with RP-1 (kerosene) also being mentioned as a possibility[46,65]. An example of an RP-1 fuelled ballistic vehicle[65] is shown in Fig 18. Single stage HLLVs have also been proposed which would employ two types of fuel[76]. The initial lift-off would be accomplished burning a hydrocarbon fuel, with a transition at high altitude to LH_2, using the same engines[65].

Apart from the fact that hydrocarbons give lower specific impulses than do LH_2, these fuels, when used in enormous quantities, present certain difficulties, some of which may become increasingly severe in the future. The first is availability; this may be the reason why the more recently reported studies have indicated a change from RP-1 to methane. RP-1 is derived, under normal circumstances, from natural crude oil, which will become increasingly scarce and expensive just as an SPS programme is accelerating towards full operational deployment. Conversely, methane can be easily synthesised, as well as derived from fossil fuels. It may be concluded that, as time progresses, the use of naturally occurring oil, and, to a lesser extent, coal, will gradually become unacceptable and that artificially produced propellants will be employed. However, to manufacture large quantities of these compounds will require massive supplies of raw materials, with attendant transport problems; these difficulties could be avoided by producing LH_2 and LO_2 at or near a coastal launch site from seawater. Of course, large amounts of energy would be needed for this.

The use of natural hydrocarbons in large quantities also causes concern over atmospheric pollution derived from impurities, notably sulphur. This will appear as a sulphate aerosol and may affect the radiative balance of the atmosphere[87], as well as introducing health and agricultural problems. Although the sulphur can be removed, this is an expensive process; for example, to remove only 40% of the sulphur from the fuel burnt by the CEGB would cost about £400M per year[87]. The other major concern is the presence of any halogens in the fuel; as

034

already mentioned, these would adversely influence the ozone layer[90]. Both problems would be absent with manufactured propellants.

In comparison with using LH_2, all hydrocarbons will produce the additional pollutant, CO_2. Although far less serious than, say, nitrogen oxides, this gas does alter the thermal and chemical balance of the atmosphere, and its influence must be carefully considered. However, as will be shown in the section on environmental effects, the increased level of CO_2 resulting from this activity is likely to be negligible compared to other sources[87], so any contribution to the 'greenhouse' effect[92] can be ignored. This is not true for the chemistry of the troposphere, where there may be a marked affect on the rate of production of ozone[93], but in a beneficial manner. In fact, it has been calculated that the ozone increase due to present levels of CO_2 will approximately cancel the decrease due to the influx of halogens[87].

The H_2O derived from the combustion of both hydrocarbons and LH_2 will have a negligible influence on the lower atmosphere but, in the dry stratosphere, a possible affect on the ozone concentration must be considered[87]. However, as all proposed HLLVs use LH_2/LO_2 for second-stage propulsion, this will be unavoidable.

It seems from the above discussion that LH_2 is likely to be the preferred propellant for both first- and second-stages, from the point of view of both performance and pollution. In 20 or 30 years time it is also likely to be more readily available, especially at a coastal launch complex. Its main disadvantages are its bulk compared to hydrocarbons, but this should be less significant in the context of ballistic vehicles, and handling problems, particularly the low temperatures involved and the high boil-off rate.

Contrary to first impressions, LH_2 probably presents less of a safety hazard than do some other fuels. It disperses rapidly following a major spill, whereas a kerosene/LO_2 mixture forms a highly explosive shock-sensitive gel[84]. Other, more exotic propellants, which have not been considered above, present even more serious accident risks. An example is hydrazine, N_2H_4, which, although offering a very high performance, would produce huge amounts of unacceptable nitrogen oxides as well as being dangerous to handle.

4.5 Launch safety

Although there have been no catastrophic rocket launching accidents in the West, there have been persistent reports of such incidents from Russia, and the possibility cannot be ignored, especially for a vehicle the size of an HLLV. The magnitude of the potential problem can be judged by quoting the characteristics of the primary transportation system recently described by Piland[33], which is capable of supporting the construction of one 10 GW SPS per year. Assuming that the necessary construction bases are already in orbit, 391 launches of an HLLV with an 11000 tonnes lift-off weight will be necessary per year. This excludes the transport of construction crews into orbit, which will require 36 launches of a different, smaller personnel launch vehicle (PLV) - see section 4.10. The propellant requirements are given in Table 7.

Table 7

HLLV propellant requirements in tonnes

	First stage		Second stage		Total	
	Per launch	Per year	Per launch	Per year	Per launch	Per year
O_2	5115	2000000	2077	812000	7192	2812000
CH_4	1714	670000			1714	670000
H_2			340	133000	340	133000

Thus, at launch, this vehicle would contain over 9200 tonnes of propellant, which has an explosive equivalent of at least 1 kg TNT per kg[84]. In fact, for a kerosene/LO_2 jell, the latter value is 1.5 kg TNT per kg, and for LO_2 frozen in LH_2 about 3 kg TNT per kg; although these figures represent explosive yields under 'ideal' conditions, which would probably not be experienced in a real situation, it would be wise to assume that the worst case launch pad explosion could reach 9 kilotonnes equivalent. This is of nuclear proportions and would require very careful consideration in the design of the launching facilities. For example, all personnel would have to be housed underground, or a considerable distance from the actual pad, and exceptionally stringent safety precautions would be necessary for fuelling operations. It should be noted that an accident might not be primarily explosive in nature; a massive, relatively slow-burning fireball might develop, particularly if large quantities of LH_2 were involved.

An even more serious launch hazard is represented by a catastrophic failure of the first-stage vehicle early in the flight. This could result in the impact with the ground of about 1750 tonnes of hardware, plus all the second-stage propellants and a significant proportion of first stage propellants. Depending on the phase of the flight at which the failure occurred, the impact velocity could be as great as 1 km/s. The explosive equivalent of the impact would be between about 200 and 1700 tonnes of TNT, depending on the mass of propellant remaining, and excluding any burning of residual propellants that might occur at the impact site[84]. It is obvious from these figures that the launch trajectory must be kept away from all populated areas.

The severity of this type of accident can be mitigated to some extent by designing the vehicle to be able to vent its LO_2 tanks extremely rapidly. As Table 7 shows, this represents the bulk of the mass of the vehicle.

A major failure in a later phase of a launch could result in the second-stage entering an uncontrolled, decaying orbit. As has been shown by the case of NASA's Skylab Space Station[94], a precise prediction of re-entry path would then be very difficult and, with a mass of at least 440 tonnes[33], the whole stage or large parts of it might be expected to hit the ground at high velocity, causing considerable damage and perhaps many casualties. It is very difficult to estimate the severity of the hazard imposed by this type of occurrence, but it must be assumed that some effort must be made to alleviate the danger. One possibility is the permanent stationing in orbit of a retrieval booster system, which could probably be operated under ground control. The aim would be to rendezvous with defective orbiters and to propel them to safe altitudes.

Information gained from testing atomic weapons[95] can be used to estimate the severity of the effects at different distances from catastrophic explosions or impacts. The relevant data are presented in Figs 26 and 27 for a 1 kilotonne explosion occurring over a range of altitudes. The regions subjected to peak overpressures of between 10 and 200 psi are shown in Fig 26, whilst Fig 27 covers the 1-15 psi range. The peak overpressure and peak dynamic pressure are shown as functions of distance for a surface 1 kilotonne explosion in Fig 28. The solid curves are for a standard sea-level atmosphere; the dashed lines are for non-standard conditions, which can have very large effects in areas experiencing about 2 psi or lower. These results can be extended by noting that the height h of an explosion producing a given overpressure at a distance d from 'ground zero' scales as the cube root of the explosive yield W in kilotonnes. This is also true of the distance to which a given overpressure extends. Thus, if d_1, h_1, and W_1 refer to a 1 kilotonne explosion,

$$\frac{d}{d_1} = \frac{h}{h_1} = \left(\frac{W}{W_1}\right)^{\frac{1}{3}} = W^{\frac{1}{3}} .$$

Using this relationship, and the worst-case data from Fig 28, the radii within which certain peak pressures would be exceeded for 1, 2 and 9 kilotonne surface explosions were deduced. They are given in Table 8.

Table 8

Radii within which peak pressure p is exceeded for a range of equivalent explosions

Explosive equivalent	Radius (ft)			
	p = 1 psi	p = 2 psi	p = 10 psi	p = 20 psi
1 kilotonne	7000	3400	1000	700
2 kilotonnes	8800	4300	1300	900
9 kilotonnes	14500	7100	2100	1500

The physical damage likely to be experienced by various structures depends on many factors, including the type of accident, weather conditions, and so on. However, guidance can be obtained from nuclear weapons experience[95,96], especially as the relatively slow burning characteristics of the large quantities of propellant that may be involved in an accident are perhaps closer to certain features of a nuclear explosion than those of a detonated conventional explosion. The major difference, in assessing blast damage, concerns the duration of the positive pressure pulse and the contribution made by the following rarefaction; in a nuclear explosion, the positive pressure pulse radiating outwards lasts for about 100 times the duration found in a conventional bomb explosion, and the damage caused is due primarily to the overpressure, not to the impulse of the blast (overpressure multiplied by duration), as in the conventional case[96]. The rarefaction wave is much less important in estimating the effects of nuclear explosions than of the detonation of high explosives.

From Refs 95 and 96, and earlier editions of Ref 95, the variation of damage with peak overpressure given in Table 9 has been compiled. From this it will be seen that launch pads should be separated by at least the 2 psi overpressure distance if a 9 kilotonne pad explosion at one site is not to severely damage neighbouring sites. Thus, from Table 9, a separation of at least 7100 ft would seem to be advisable; this would have to be increased considerably, however, if it was deemed necessary to take into account uncontrolled crashes from a relatively low altitude. If damage is to be minimised, however, separation of major installations from launch pads should be much greater; Livingston[97] has stated

034

that the maximum overpressure should not exceed 0.4 psi. Taking this criterion, the separation distance for an HLLV should be about 14000 ft (4267 metres); for Saturn V, it was 8500 ft (2590 metres).

Table 9

Structural damage caused by large explosions as a function of peak overpressure

Overpressure (psi)	Damage
<<1.0	Windows likely to be shattered. (Starting at ~0.04 psi)
1.5	Light to heavy damage to window frames, doors, plaster
2.0	Moderate blast damage to majority of houses
3.0	Severe damage to most houses. Some collapse
4.0	Structural damage to multistorey brick buildings
7.5	12 inch brick walls severely cracked
8.5	Light concrete buildings collapse
13.0	18 inch brick walls destroyed
20.0	Virtually all buildings destroyed

It is perhaps interesting to note that humans appear to be much more tolerant to blast waves. Although ear drums may be burst at peak overpressures of between 5 and 15 psi, depending on conditions, no serious medical damage results until 200-250 psi is reached. This can cause haemorrhage, particularly in the lungs[96,97]. However, buildings should not be occupied if peak overpressures of 0.4 psi will be exceeded.

Finally, it should be pointed out that the impact of an uncontrolled HLLV with the sea could cause a significant tsunami-type wave to propagate for considerable distances. The expected wave height is plotted in Fig 29 as a function of distance from a 1 kilotonne underwater explosion, for water 85 ft deep, and more than 400 ft deep[95]. Although scaling relationships are available to compute the wave height resulting from any explosion at any depth, it is likely that the impact in question will be equivalent to a distributed explosion, with much of the energy concentrated near the surface. Thus it would not be particularly informative to calculate numerical values at this stage, although it should be noted that heights of the order of 10 ft could be produced at a distance of 1 mile from the impact point. Thus it would be prudent for shipping to avoid a strip of the sea's surface beneath the launch trajectory.

It may be concluded from the above discussion that the launching operation will not be acceptable if carried out in populated regions of the world, owing to the catastrophic results of several possible types of accident. Although some launch sites may be available in almost deserted areas, such as Siberia and central Australia, they are well removed from the equator, and therefore require the HLLVs to make additional energy-consuming manoeuvres[71]. In addition, access and the supply of propellants would present further difficulties. Thus an equatorial coastal or island site, well-removed from popular shipping routes, would be preferable from all points of view; this is dealt with more fully in section 4.8.

4.6 Acoustic noise

Although the emission of acoustic noise has long been a severe problem in connection with the aircraft industry, particularly since the widespread adoption of turbojets for civil aircraft, surprisingly little attention has been paid to this aspect of launch vehicle technology. Apart from a few measurements of the noise emitted by specific launchers[97-99], most of the work in this field has been concentrated on any adverse effects that the acoustic environment may have on payloads, and on devising appropriate qualification test procedures. Of course, HLLVs of the type discussed here are so much larger than even Saturn V that the noise data available for this[100] and other launchers will not necessarily be a very good guide.

This scaling problem is further compounded by many other factors that influence the subjective effects of intense noise[101]. Examples are the prevailing atmospheric conditions, the ground topography, the design of the building, if any, housing the observer, and the configuration of the launch vehicle itself. Of particular importance is the presence of an atmospheric temperature inversion. This can lead to trapping of the sound energy within a layer of the atmosphere close to the earth's surface, with a resultant increase in the noise level perceived by an observer[102]. Multiple reflections can also produce intense foci far from the source, under these conditions.

It has been shown by Lighthill[103], however, that the noise power radiated by a jet or rocket motor can be estimated from the total jet mechanical power. Physically, the conversion of jet energy into acoustic energy takes place because there is a severe velocity shear between the periphery of the jet and the atmosphere; this is greatest at lift-off, when the vehicle has zero velocity relative to the surrounding air. As the vehicle accelerates, the relative velocity falls and the resulting noise is reduced slightly. The jet acts as a quadrupole noise

034

source, with, theoretically, zero intensity on axis and maximum intensity at an angle of about 45° to the axis[101]. Lighthill[103] showed that, on the basis of experimental measurements made on various rocket motors, the efficiency K of the conversion process approaches 0.006 as the jet velocity reaches three times the speed of sound in the surrounding air (about 1000 m/s at sea level), and then remains constant at about this value. The experimental data used in this analysis included measurements of the angular distributions of the far-field noise levels produced by solid fuelled rockets in the 700-2300 kg thrust range[104].

This simple approach to estimating noise power has been confirmed by Koelle[105], although a range of values of K, 0.005 to 0.01 was given, and it has been used to calculate, for example, the noise field around a Goldfinch rocket motor[101]. If P_r is the radiated noise power, F is the thrust produced by the rocket and v_e is its exhaust velocity, then

$$P_r = K \times \tfrac{1}{2} F v_e .$$

The validity of this rule may be roughly checked by applying it to a vehicle for which P_r is known; if possible, this should be done for a large rocket, so that the extrapolation to an HLLV is minimised. Fortunately, an estimate is available[106] for the noise power radiated by the largest launcher yet used, the Saturn V. At lift-off, it radiated about 10^8 watts. The five F-1 rocket motors propelling the first stage had a total thrust of 3.44×10^6 kg at a specific impulse of 265.4 seconds at sea level[107]. Thus $F = 3.38 \times 10^7$ newtons and $v_e = 2603.6$ m/s, giving K = 0.0023. This result is close enough to those given above to confirm that this approach is sufficiently accurate for many purposes.

In view of this reasonable agreement, the above relationship has been used, with K = 0.005, to calculate the noise power produced by the two-stage ballistic HLLV proposed by Boeing[73] and shown in Fig 20, the two stage winged HLLV favoured by NASA Johnson SC[33], and the winged vehicle also suggested by Boeing[43] and shown in Fig 21. The relevant propulsion characteristics are given in Table 10, where values for the Space Shuttle and Saturn V are included for comparison.

The derived values of P_r in Table 10 are in the range 1 to 1.5×10^9 watts for the three types of HLLV discussed, an order of magnitude greater than for existing launch vehicles. If K were to be increased to 0.01, these values would be doubled. Relative to the normal reference level[106] of 10^{-12} watts, the equivalent noise sources are in the range 210-212 dB; they would be the most

034

Table 10

Derivation of noise power radiated by large launch vehicles

Vehicle				First stage engines					Noise power†	
Proposer	Type	Ref	Lift-off mass (kg)	Fuel	No.	Thrust (MN)	v_e (m/s)	SI (s)	(W)	(dB)*
NASA	Space Shuttle	19, 108 108	1.86×10^6	Solid LH_2	2 3	14.7 2.1	2570 ~4415	262 ~450	2.6×10^8	204
NASA	Saturn V	106, 107	2.85×10^6	RP-1	5	6.8	2600	265	10^8††	200
Boeing	Two-stage ballistic	73	10.47×10^6	RP-1	16	9.1	3441	351	1.3×10^9	211
NASA	Two-stage winged	33	11.0×10^6	CH_4	20	8.8	3473**	354**	1.5×10^9	212
Boeing	Two-stage winged	43	9.57×10^6	RP-1	16	8.3	3441	351	1.1×10^9	210

* Reference level 10^{-12} watts. ** Derived from published data. † Assuming K = 0.005.

†† Estimated from actual launch.

powerful ever produced. Unfortunately, the shear magnitude of the radiated power probably causes this analysis to be less accurate than the Saturn V data suggest. This is because, at such levels, nonlinear propagation phenomena are to be expected[101]. In particular, at a given distance from the source, higher frequency components may be more intense than would be expected from the inverse square law, because the very high level of low frequency noise generates harmonics that increase in significance with distance from the source. In addition, rockets of this size are likely to have exhausts containing intense unsteady shock waves, which can produce additional noise that cannot easily be predicted.

Despite these reservations, these values of P_r have been used to calculate the noise levels at various distances from a launching site, assuming a reference level[106] of 10^{-12} W/m^2. It was assumed that the launch site acts as a point source radiating acoustic energy uniformly into free space, then a correction of a factor of 2(+3 dB) was made for the fact that the ground plane confines the energy to a hemisphere, with a further correction of +3 dB also being included to account for ground reflection effects experienced by a normal observer[101]. The influence of non-standard atmospheric conditions, and of any absorption, has been ignored, although such factors can be of considerable importance (pp 56-70 of Ref 106).

The noise intensities resulting from this analysis are plotted against distance in Fig 30. It will be seen that all HLLV concepts are far more noisy than the Shuttle or Saturn V, and that it is possible that unacceptable intensities may propagate as far as 150 km from the launch site, ignoring any amplification by weather conditions. In fact, it is likely that extreme discomfort would be experienced at 20 km from the site, increasing to over 30 km if K rose to 0.01. It would not be possible to be closer than 2 km to the rocket at lift-off without risking physiological damage to the ears. It should perhaps be noted that much lower values have also been quoted, such as 108 dB at 10 km[25]. Conversely, Hanley and Bergeron[109] have recently published data for a 400 tonnes payload ballistic two-stage vehicle that support the results obtained here, as shown in Fig 30. They obtained 130 dB at 5.6 km and 120 dB at 13 km. Similarly, Livingston[97] has quoted noise levels 6.7 dB above those estimated for Saturn V, reaching 130 dB 5 km from the launch pad and 120 dB at a distance of 14 km. Livingston's values, which were derived from measurements made on Saturn I launches, are plotted in Fig 30 for both Saturn V and the HLLV; they are in reasonable agreement with the present analysis.

The objective effect of the noise environment is influenced by the frequency spectrum, as well as by the intensity. To some extent, lower frequencies can cause more annoyance than higher ones, so it is unfortunate that rocket motors tend to emit much of their acoustic noise at below 100 Hz; an earlier Saturn vehicle produced its maximum sound pressure level at about 60 Hz[110], and the data of Ref 93 led Holbeche[101] to predict that the peak would occur at 72 Hz for the Goldfinch motor. Such lower frequencies can cause problems in certain buildings, in that they are close to natural fundamental frequencies, and thus excite resonances. The structure then may act as a frequency converter, generating higher frequencies.

Finally, it has been pointed out[84,101] that the launch site could be placed at the centre of a large hollow in the earth's surface, which could be either natural or man-made, and this might direct much of the emitted noise upwards and away from populated areas. Although possibly effective initially, this would not alleviate the problem once the HLLV had gained an appreciable height, so it is unlikely to be very helpful.

4.7 Re-entry

The re-entry phases of the mission have been referred to previously in connection with both first and second stages of the HLLV. In particular, the advantages of winged vehicles from the point of view of cross range capability have been mentioned (Table 6). Of course, this benefit may only be obtained at the expense of considerably greater complexity, structural mass and development cost[43].

For a winged first-stage, the re-entry and landing phases should be relatively straightforward, especially with the use of air-breathing auxiliary engines, as advocated by Piland[33]. The landing would be accomplished on a normal runway, as with the Space Shuttle, the only difference being the much greater size and mass; this would be, typically, at touch-down, 935 tonnes, or about three times that of a Boeing 747. No new techniques or procedures would be needed.

Re-entry of a ballistic first stage must be preceded by the retro-lob manoeuvre depicted in Fig 19, if the landing is to take place at the launch site; this is vital to a rapid turn-around, and if the maintenance problems introduced by a sea recovery are to be avoided. Assuming that this manoeuvre has been carried out, the remainder of the flight should present no great difficulty. The propellant required for a soft vertical landing at the launch site would amount to about 51 tonnes for a vehicle delivering a payload of 454 tonnes

(Table 4); this is not an excessive penalty. The touchdown mass would be 733 tonnes.

The 2500 km cross range ability of a winged orbiter presents a significant advantage in selecting the time of re-entry, allowing much greater operational flexibility. However, apart from the mass penalty, this introduces a further difficult problem, that of airframe heating through aerodynamic friction. This has been solved, with some considerable effort during the development of the Shuttle, by producing special ceramic tiles[19], but it is likely that the replacement of these will be frequently required, especially around the leading edges of the wings and at the front of the fuselage, representing a significant maintenance cost. The problem will be much more severe for an HLLV, due to its much greater kinetic energy. Fortunately, unlike the Shuttle, the HLLV will return without a large payload, so it can have a relatively low lift to drag ratio, which will allow it to decelerate higher up in the atmosphere[84]. Assuming that the heating problem can be overcome, the remainder of the re-entry can proceed as for the first stage, although the go-around capability will probably be much reduced, most of the published designs not including air-breathing engines on the orbiter[33,65].

The re-entry of a ballistic orbiter would be rather less of a problem from the aerodynamic heating point of view. The mass per unit frontal area would be relatively low, compared to a winged vehicle, permitting energy loss and deceleration to occur at a relatively high altitude. The vehicle would meet the atmosphere base-first, and ablation of the protective covering would be low; in fact, it is possible that, with hydrogen cooling, no ablative protection would be required, considerably reducing maintenance cost and turn-around time[84]. For a touch-down mass, at the launch site, of 350 tonnes, the vertical landing propellant needed would be about 18 tonnes. Again, a salt water recovery should be avoided at all costs.

In both cases, sonic booms on launch and re-entry could be a serious problem, with overpressures as much as 3-11 psi being experienced on the ground[111]. This will be unavoidable, owing to the large mass and size of all of the vehicles under consideration. Unfortunately, there is little previous experience on which to base any assessment of this problem, although the Space Shuttle will soon provide some guidance (see Table 11).

Table 11

Estimates of sonic boom generation by Space Shuttle[15]

Flight phase	Distance from launch site (km)	Overpressure (psi)
Ascent		
- shockwave first reaches ground/sea	60	0.044
- lateral cut-off*	59	0.013
- down-range	85	0.007
- focal zone** centre		0.216
- focal zone** lateral cut-off*		0.072
Booster re-entry	280-370	0.014-0.022
Orbiter re-entry	>650	<0.004
	185	0.007
	<44	0.015 max

* Where local gradient in speed of sound causes boom path to turn horizontal.

** Zone where sonic boom is focussed and reinforced by in-flight manoeuvres. Approximately 300 metres wide at the ground track and extending 75 km to either side.

Responses

0.008 psi - 10% of people regard as annoying

0.022 psi - all people regard as annoying. Some damage to plaster and windows

<0.15 psi - primary structures not harmed.

As the largest predicted overpressure[15] for the Shuttle is just over 0.2 psi, and there are strong objections to the flight of this vehicle over populated areas, it is evident that the effects of HLLV operations would be intolerable. It would, therefore, appear to be prudent to position trajectories over the sea or relatively uninhabited land areas, especially as several launches and re-entries per day are contemplated.

4.8 Launch sites

For simplicity, especially as regards costing, it has often been assumed that the HLLVs will be launched from an existing establishment, such as the Kennedy SC[33,97]. There are, however, many excellent reasons for advocating the construction of special facilities elsewhere, although the one usually quoted is the need to minimise the energy required for launch into an equatorial orbit[25,71].

From an equatorial site, the launch is assisted by a velocity gain due to the earth's equatorial bulge (about 500 m/s), by the possibility of a due east launch, and by the absence of any plane change requirement during the subsequent transfer to geostationary orbit[71].

The latter factor offers very considerable savings, as is indicated by the graph in Fig 31, which shows the velocity increment required to transform from low earth orbit to geostationary as a function of initial inclination. The mass assumed for the transfer vehicle is 295 tonnes. As compared to a launch from the Kennedy SC, an equatorial launch would save a transfer velocity increment of 390 m/s. Assuming a cost of $44 per kilogram to reach low orbit and the use of chemical propulsion to accomplish the orbit transfer, the saving per mission would be $2.5M[71]. This could, in itself, amount to a saving of $850M during the construction of a single 10 GW SPS. For this reason alone, therefore, a considerable incentive exists to find an equatorial launch site.

Other reasons include the existence of more launch windows, the more favourable wind conditions, and the reduced re-entry velocity. The weather, in general, is also more likely to allow operations to continue throughout the year.

If the compelling arguments in favour of an equatorial site are accepted, the number of possible locations is restricted to certain areas of Africa and South America, such as Northern Brazil, to the islands forming Indonesia, and to many other islands north of Australia and in the Pacific. As already mentioned on several occasions, a coastal site is to be preferred; it would have the following advantages:

(i) Easy access, provided that a deep-water harbour was available.

(ii) Launch safety readily ensured, with sea beneath the vehicle's initial trajectory. A major accident, involving impact of the vehicle, would probably cause no damage or casualties.

(iii) An immediate supply of basic raw materials for propellant manufacture, should LO_2/LH_2 be produced locally.

(iv) No problems in providing cooling water for launch operations or power production plants.

The ideal situation would appear to be an isolated coastal site, having a deep water harbour, where a nuclear reactor could be used to provide power for all purposes, including the manufacture of LH_2 and LO_2 from sea water. Sufficient widely separated launch pads would be constructed to support the complete SPS operation. To build one 10 GW SPS per year, it has been estimated that six HLLVs with a payload of 424 tonnes would be needed, assuming a 4 days turn-around time and 25% spare capacity. A total of 391 launches per year would be required, excluding the transportation of personnel and the actual construction bases and machines[33]. Probably three or four launch pads would be needed for the HLLVs, with additional facilities also being necessary for the personnel launch vehicles (PLVs). Thus the total complex would be very large.

An isolated site is necessary owing to the immense noise generated by the HLLVs and the need to take into account the possibility of a launch pad explosion. As shown in Fig 30, severe launch noise can extend as far as 150 km from the site. This is probably the most important restriction, the blast waves from a launch pad explosion being of serious magnitude to a distance of about 5 km only (Table 8). A large isolated area would also be necessary to avoid a population being subjected to intense shockwaves produced during re-entry, although estimates of this are not available.

It seems that, for most countries, the land area required would be prohibitively large. Consequently, an equatorial island may well prove to be an ideal solution to this problem; possible candidates[71] are listed in Table 12, with Christmas Island and Tarawa (in the Gilbert Islands) being judged the most suitable. All five possibilities are atolls or coral reefs with very low elevations above sea level. Although their land areas are not large, they usually consist of a group of coral reefs surrounding a lagoon or a string of islets along a reef, so the effective area can be quite considerable.

Table 12

Candidate islands for an equatorial launch complex

Name	Ownership	Latitude	Longitude	Land area (ml^2)	Population
Christmas	UK	$1^{\circ}51'$N	$157^{\circ}23'$W	94	360
Fanning	UK	$3^{\circ}52'$N	$159^{\circ}19'$W	12.3	500
Malden	UK	$4^{\circ}3'$S	$154^{\circ}59'$W	15	None
Nauru	Independent	$0^{\circ}31'$S	$165^{\circ}56'$E	8	5200
Tarawa	UK	$1^{\circ}25'$N	173°E	14	3582

4.9 HLLV development and costs

It can be assumed that the development of an HLLV can be undertaken only by the USA or USSR, as only those countries have the necessary experience and resources. It must also be accepted that it is unlikely that it will be possible to develop an HLLV by evolutionary procedures from the launchers at present available; too many steps would be required, and each would be extremely costly. It is therefore probable that the project would be undertaken in a single step, or, at most, in two steps, although, of course, the basic technology could be developed and tested earlier on other vehicles.

This is not such a drastic proposal as would seem at first sight, especially if a two-stage ballistic vehicle was selected. If conventional technology was adopted initially, work could start very soon, using the Space Shuttle's main engines for the second stage[46] and, possibly, an improved version of the Saturn V's engines for the first stage, assuming that kerosene is selected as its fuel. The 6.8 MN thrust of the Saturn V's F-1 engines[107] is not far removed from the 8-9 MN normally assumed for an HLLV (Table 10), although effort would be required to improve specific impulse and lifetime. In addition, if it was decided to employ LH_2/LO_2 engines for the first-stage, the Shuttle engines could still be of use, with appropriate modifications to the expansion ratio[109].

If a winged HLLV was adopted, the Shuttle's propulsion technology could still be applied with advantage[33,43]. However, the development problems associated with the aerodynamic surfaces and the control of the vehicle would probably be severe, especially in connection with the heating experienced during re-entry. Attaining the required level of reliability and re-usability would not be easy. For this reason, the development programme for a winged, horizontally landing HLLV would be more extensive and costly than that for a ballistic type[43].

A common suggestion[33,65,75] is that development of the Space Shuttle should continue, to increase its payload capabilities, prior to commencing a major effort on a winged HLLV. Such a programme would yield a great deal of valuable information applicable to the HLLV, and would also provide a vehicle that could serve as a personnel transport. The simplest step would be to replace the solid boosters at present used with liquid-fuelled rockets. A Rockwell suggestion[65] includes twin LH_2/LO_2 boosters which would be fully re-usable. On a due east launch, the payload could be increased by 50% to about 45 tonnes. Four Shuttle main engines would be used on each booster, with optimised expansion ratios for low altitude operation.

034

A rather different suggestion, published by NASA[33], uses an external tank of reduced size mounted on a large first stage containing four methane-burning engines in its base. This series-staged concept would have a payload of around 36 tonnes and its engines, of 8.83 MN thrust, would be the same as those to be employed on a winged HLLV; it is shown in Fig 32. A similar proposal by Boeing[43] includes four propane-burning engines of 8.52 MN thrust and a payload of 74 tonnes. The need to develop new engines is avoided in an earlier NASA concept[71] which uses F-1 motors to give a payload of 45 tonnes.

More advanced versions of the Shuttle concept have also been proposed, extending the technology closer to that appropriate to future HLLVs. For example, NASA Langley have studied single-stage-to-orbit derivatives of the Shuttle[75]. One promising version would be launched vertically[112] and land horizontally. It would be powered by mixed-mode O_2/RP-1/H_2 engines[76], and would have a lifting body aerodynamic configuration. Its lift-off weight would be about 1140 tonnes, with a payload of around 30 tonnes. More recently, control configured designs have been studied by Boeing[113] under contract to NASA Langley. These were single-stage-to-orbit vehicles with lift-off weights of 1469 tonnes in the vertical mode, payloads of 29.5 tonnes, and 6 LO_2/LH_2 engines, three with thrusts of 3.5 MN at a fixed expansion ratio, and three with 3.7 MN and two-position nozzles. The study concentrated on the control characteristics of these vehicles during re-entry and landing. The more advanced version is shown in Fig 33.

If it was decided to produce an interim ballistic HLLV, with a payload intermediate between that of the advanced versions of the Shuttle and the HLLV discussed earlier, development of Shuttle technology could still be used[65]. In particular, a liquid-fuelled booster would enable payloads of about 92 tonnes to be raised to low earth orbit if two were employed, or 163 tonnes with four operating in parallel. This would be a relatively low cost option, as new engines would not be needed and the orbiter could consist of part of the Shuttle's fuselage, less its wings. The main difficulty with this concept would be operational; although completely re-usable, liquid-fuelled boosters would probably lack the ability to return to the launching site, as would the large external fuel tank, which would still be necessary.

It can be concluded from this discussion that present-day technology is probably adequate to successfully produce a two-stage ballistic HLLV, particularly if the Shuttle's main engines can be used throughout. It would be more difficult to design a winged HLLV in one step, but advanced Shuttle concepts at present under study should provide much of the additional knowledge required.

The development cost of either type of vehicle can only be assessed, with any hope of realism, by organisations with experience of other work in this field. Thus Boeing's estimated development costs of $7.6B for a ballistic HLLV having a 391 tonnes payload and of $9.1B for a winged vehicle of about the same capability[43] must be regarded as realistic. These costs include the provision of all necessary items, including 2½ ground test models and two flight test models; it is assumed that the latter would be refurbished later for operational use. It is interesting to note that the ballistic vehicle is cheaper mainly because the development of its second-stage is relatively simple, reflecting the much lower impact of aerodynamic heating in that case; the ballistic second-stage costs about $2.8B, whereas the winged version requires $4B.

Although the above costs appear to be over-optimistic when compared to the estimated $5.3B required to develop a single-stage-to-orbit vehicle with a 29.5 tonnes payload[75], values obtained earlier by NASA[71], are in broad agreement. The difference is probably related to the highly advanced technology required by the single stage vehicle. The NASA figures are reproduced below in Table 13, from which it will be seen that the winged HLLV remains the most expensive option, the difference being more than a factor 2 (the difference estimated by Boeing was 20%). It should also be noted that the additional development cost of doubling the payload of the ballistic HLLV to 900 tonnes is very small. The table also gives production and flight costs; these will be referred to later.

Table 13

Development, unit and flight costs for several HLLV concepts
(NASA: Ref 71)

Type	Payload (tonnes)	Fuel* (first-stage)	Costs		
			Development	Unit	Flight
Winged	450	LH_2	$11.51B	$828M	$2.76M
		RP-1	10.73	802	2.67
		Propane	10.52	743	2.47
Ballistic	450	RP-1	4.63	416	1.39
		Propane	4.21	370	1.23
Ballistic	900	RP-1	5.21	678	2.26
		Propane	4.79	595	1.98

* Second-stages all use LH_2.

034

It would appear from Table 13 that, on cost grounds alone, a ballistic vehicle is preferable, and that it should be as large as possible. However, the environmental impact of the HLLV will increase dramatically with size, particularly the launch noise and the re-entry shockwaves, so it may not be possible to approach the economically desirable goal offered by the 900 tonnes payload device. It is also worth noting in this context that the acoustic environment with such a vehicle may be near the limit at which structural damage would be caused to the rocket or its payload; a McDonnell Douglas study indicated that this might occur at a lift-off mass of 25000 tonnes[84].

Further confirmation that the costs quoted above are of the correct order comes from a recent NASA paper[33], which puts the development of a winged HLLV at $11.1B, for 391 tonnes payload. Grumman[9] have also presented overall costs which are consistent with these other predictions. Thus, there appears to be a reasonable concensus that the development of a winged HLLV with a payload of around 400 tonnes will cost between $23M and $26M per tonne of payload, depending on type of propulsion. There is less agreement in the case of two-stage ballistic vehicles, $9.4M to $19.4M per tonne at around 400 tonnes being quoted; this variation may be due to widely differing assumptions, few of which are stated in the available publications.

The unit costs in Table 13 highlight another serious disadvantage of the winged concept which, with a finite vehicle life, must also be reflected in the overall transportation costs. The benefits of scale are also apparent, but, as already mentioned, environmental factors may impose a limit here. A further comparison of the winged with the ballistic HLLV is included in Fig 34, which is based on a Boeing analysis[7] of production costs spread over 300 units, with appropriate learning curves. Earlier NASA figures[71] have also been included for completeness; as these are for first production units, the equivalent Boeing costs are also shown. It will be seen that, on a cost per kilogram of weight basis, the larger HLLVs are not likely to be more than about twice as expensive as present day jet transport aircraft; if achieved, this would represent a considerable accomplishment. It will be noted that this method of presentation shows the winged HLLV to be slightly superior to the ballistic type. This, however, is a reflection of its much higher structural mass, and, as Table 13 indicates, the ballistic vehicle is the least costly, by a considerable margin.

The unit costs in Table 13 can be broken down into the costs of the various sub-systems[43,71]. This procedure indentifies the payload shroud as being a particularly important item[71]. It is often considered to be expendable, but, at an estimated $1.7M for a 450 tonnes payload, it represents up to 14% of the operating costs. Consequently, every effort should be made to re-use this item. The cost of a re-usable shroud would depend on many factors, such as payload density, but it might amount to $10M for a payload of 400 tonnes, and it would weigh 6-9% of the payload; for comparison, the Skylab shroud weighed 13% of the payload. The HLLV depicted in Fig 20 includes a re-usable shroud, which can be retracted prior to re-entry to present a smaller surface area[43].

Not surprisingly, although there is agreement concerning the order of magnitude of unit costs between various investigating teams, the actual published figures vary considerably. For example, the costs derived by NASA for HLLVs having first stages fuelled by RP-1 would appear to be optimistic, whereas those obtained by Boeing are much more pessimistic. The data are reproduced in Table 14; they refer to the first production units in each case. Although the difference can be partly accounted for by inflation, especially in the case of the winged HLLV, this canot be so for the ballistic vehicle, where the NASA figure is more than a factor 2 below that given by Boeing. In the absence of firm data to the contrary, it would be prudent to assume the higher, more recent values in any economic assessments of SPS systems.

Table 14

Comparison of NASA and Boeing unit costs[43,71]
(First stages fuelled by RP-1)

	Winged HLLV		Ballistic HLLV	
	Payload (tonnes)	Cost ($M)	Payload (tonnes)	Cost ($M)
NASA	450	802	450	416
Boeing	381	1081	391	974

Actual operation costs have received greater study than development costs; a selection of published values are shown in Table 15 in chronological order, with the Space Shuttle heading the list for comparison. These costs are crucial to the whole SPS concept, and it is usually accepted that transport to low earth orbit must be brought well under $100 per kg, or almost an order of magnitude less than the Shuttle charge[19]. In fact, several analyses[9,114] have shown that it is vital that this cost be reduced to below about $40 per kg. These aims can be put into context by examining Fig 35, which includes a typical expendable launcher as well as the Shuttle.

Fig 35 also includes a target of $130 per kg to geostationary orbit, and several estimates of this cost have been noted in Table 15. However, these figures are very much dependent on a number of factors which are closely related to the design of the satellite; these include the construction technique to be used, the construction site, and the propulsion concept to be employed. The values given in Table 15 have assumed the use of electric propulsion for this purpose[115]. The competitive transport cost to geostationary orbit is shown as a function of SPS mass in Fig 36, for various allowed transportation costs per unit of electrical power output[86]. It can be seen that values of between $40 and $130 per kg are competitive, confirming that massive reductions in present day costs will be necessary. For example, an expendable launcher, such as the Titan 3C, delivers payloads to the geostationary orbit for about $18000 to $25000 per kg, and the Shuttle, when used with an interim upper stage, will reduce this to $15000 per kg[1,19], still over two orders of magnitude too large.

The transportation costs per unit electrical output shown in Fig 36 are a reasonable fraction of the present day costs of installing electrical generation capacity. For example, nuclear power plants cost, typically, around $1400 per kW[116].

From Table 15, it can be seen that a two-stage ballistic vehicle should be able to deliver about 400 tonnes to low earth orbit for about $16 to $25 per kg. The equivalent range for the winged HLLV is $16 to $33, confirming that the former has retained its cost advantage, mean costs being $26.2 per kg for the winged HLLV and $20.5 per kg for the ballistic version. This represents a very large total sum for the construction cost of an SPS of, say, 100000 tonnes mass. Although the values for transportation to geostationary orbit are much less precise, it can be concluded that, using electric propulsion, below $100 per kg should be achievable and, possibly, $40 to $50 per kg may be reached eventually.

The cost breakdown of HLLV operations has been derived by several organisations in the course of estimating total expenditures. The most complete information has been supplied by Boeing[43] and NASA[71], with Boeing giving details of the methodology employed in arriving at their estimates, and of assumptions made concerning vehicle lifetime, maintenance costs, spares purchases, learning curves, manpower requirements for all maintenance and turn-around functions, and so on. The Boeing results for both ballistic and winged vehicles are summarised in Table 16. It will be seen that the main difference between the two concepts

034

Table 15

Costs of transportation to low earth orbit and to geostationary orbit

Date	Organisation	Ref	HLLV type	Payload (tonnes)	First stage propellant	HLLV lift-off mass (kg)	Costs ($ per kg)	
							To LEO	To GEO*
1978	NASA	19	Shuttle	29.5	Solid/LH_2	1.86×10^6	840	14430†
1974	Arthur D Little Inc	70	2S					220
			1S					110
1976	NASA**	71	2S, W	450	LH_2	11.05×10^6	46.2	
					Kerosene	13.36×10^6	32.7	
					Propane	13.74×10^6	30.5	
			2S, B	450	Kerosene	7.57×10^6	25.1	
					Propane	7.66×10^6	23.3	
			2S, B	900	Kerosene	14.03×10^6	19.0	
					Propane	14.20×10^6	17.4	
1977	Boeing	43	2S, B	391	RP-1	10.47×10^6	17.9	50-80
			2S, W	381	RP-1	9.57×10^6	19.2	
1977	Boeing	7	2S				20	
1977	Boeing	46	2S, B	405	RP-1	10.46×10^6	20	36-55
1977	Glaser	1		200-500	Hydrocarbon		16	40
1978	Martin-Marietta	75	1S, B		RP-1	5.4×10^6	16	
			1S, W		RP-1	4.8×10^6	16	
1978	NASA	33	2S, W	424	CH_4	11.0×10^6	20	<100
		9	2S, B	230			33	
1978	Grumman	9	2S, W	455			32	
1978	ESTEC	22					10-70	50-200
1978	Boeing	11	2S, W	420	Hydrocarbon		33	
1978	Boeing	115					17.5	
1978	Glaser	117		200-500	Hydrocarbon			40
1979	NASA	118					10-50	
1979	University of Berlin	21	(Cost objectives only)				25	100

* Using electric propulsion for transfer from LEO to GEO.

** With re-usable shroud. Expendable shroud adds 8-14% to costs.

† Using two-stage IUS

1S - single stage vehicle	2S - two-stage vehicle
W - winged vehicle	B - ballistic vehicle

concerns the costs of production and spares; in particular, the second stage is much cheaper for the ballistic option, although the first stage engines are more expensive.

Table 16

Operational cost breakdowns for winged and ballistic two-stage HLLVs

	Cost per flight ($M)	
	Winged	Ballistic
Payload (tonnes)	381	391
Item		
Production and spares		
- first stage airframe	0.999	0.943
- first stage engines	0.576	0.892
- second stage airframe	0.903	0.517
- second stage engines	0.761	0.473
- payload shroud	-	0.161
Tooling	0.421	0.383
Ground operations and systems	0.575	0.584
Propellants	2.001	1.964
Direct manpower	0.682	0.682
Indirect manpower	0.735	0.735
Administration	0.281	0.281
TOTAL	7.934	7.615

Contrary to intuitive expectations, propellant costs do not dominate. They amount to 25% for both vehicles, a figure roughly in agreement with those published elsewhere[1,75]. However, they do vary with choice of fuel, with LH_2 being much more expensive than either RP-1 or a synthetic hydrocarbon[71]. However, as already pointed out in section 4.4, such estimates should be treated with extreme caution, because hydrocarbon fuels may be in very short supply when an SPS system is being deployed.

4.10 Personnel transport

An important characteristic of an SPS system is the need for extensive astronaut involvement in its construction and maintenance. All proposals have included the participation of large numbers of personnel, and these must be transported to low earth orbit, initially, and a large proportion of them must also be carried to geostationary orbit. The relative numbers depend on many factors, such as the location of the construction site, the technology to be employed, and the degree of maintenance necessary during subsequent operation of the SPS. Nevertheless, the degree of expansion from present day levels that will be required can be illustrated by pointing out, that, in mid-August 1978, the total space flight experience of the USA and USSR amounted to 937 man-days[119]. A NASA estimate for the effort required to build one 10 GW SPS is around 550 man-years[33], a factor of over 200 greater.

These levels of activity will require the development and deployment of specialist personnel launch vehicles (PLVs). At any one time, in the NASA scenario, over 500 people will be in space constructing each SPS. With a stay time of 90 days, 36 flights will be required per year to ferry them to low earth orbit. This can be accomplished with a fleet of two vehicles, assuming a payload of 36 tonnes and a turn-around time of 14 days[33].

It is generally assumed that this task can best be accomplished, at minimum cost, by using an advanced, totally re-usable version of the present Space Shuttle. A 36 tonnes payload version is shown in Fig 32. This would be a series staged device, the first stage being based on four of the methane-burning engines to be developed for an HLLV[33]. Propane-burning engines were included in a proposal by Boeing[43] having a much larger payload, 74 tonnes. Much more advanced concepts have also been proposed, including single-stage-to-orbit types; one of these, designed by Boeing[113], is depicted in Fig 33. However, there seems little need to invoke such advanced technology in considering how initial work on an SPS system might be carried out, because present day capabilities seem adequate.

Various proposals are summarised in Table 17, from which it will be seen that the orbiters are all of a winged configuration. This is deemed necessary to confer on the vehicle a large cross-range capability, for safety reasons. Most designs also incorporate reserve propellant to provide greater safety in landing manoeuvres. The few costs available should, as with the HLLV, be treated with caution. They are usually based on rather arbitrary assumptions concerning number of units built, number of flights per year, learning curve effects, and so on. For instance, the Boeing figure of $12.2M per flight given in Table 17 assumes 256 flights per year for 14 years[43], a very much greater level of activity than in the NASA baseline scenario[33].

Table 17

Summary of personnel launch vehicle proposals

Proposer	NASA	Boeing	NASA	Boeing	Rockwell	Martin
Reference	33	113	71	43	65	112
Number of stages	2	1	2	2	2	1
First stage - fuel	CH_4	LH_2	RP-1	Propane	?	RP-1/LH_2
- type	B	W	B	B	?	W
Second stage - fuel	LH_2	-	LH_2	LH_2	LH_2	-
- type	Shuttle	-	Shuttle	Shuttle	Shuttle	-
Lift-off mass (tonnes)	2375	1469	2175	2512		1140
Payload (tonnes)	36	29.5	36	74	?	30
(passengers)	50	?	68	?	74	?
Engines, thrust (MN)	4 × 8.83*	3 × 3.5	4 × 6.8†	4 × 8.5	?	?
	3 × 2.1**	3 × 3.7	3 × 2.1**	3 × 2.1**	3 × 2.1**	?
Cost per flight ($M)	?	?	11.6-11.9	12.2	?	?

* HLLV engines

** Space shuttle main engines

† F-1 Saturn engines

B - ballistic vehicle

W - winged vehicle

5 TRANSPORTATION TO GEOSTATIONARY ORBIT

Although the transport requirements to geostationary orbit depend critically on the constructional philosophy adopted for the satellite, all techniques that have been proposed involve the movement of very heavy and bulky payloads from low earth orbit to geostationary. The linear dimensions of an SPS are three orders of magnitude larger than those of the payload bay of any plausible vehicle, so it is evident that the spacecraft cannot be constructed in low orbit and delivered subsequently, in one piece, to geostationary orbit.

Several different methods have been proposed for the orbit transfer mission, although those studied in greatest depth are dependent on chemical and electric propulsion. The former makes use of conventional rocket technology, usually LH_2/LO_2 engines[118], whereas the latter techniques convert electrical energy to thrust by accelerating electrically charged particles by means of electromagnetic or electrostatic fields. Alternatives include hybrid systems, notably resistojets, where a gaseous propellant is heated electrically to produce a higher specific impulse, and various types of nuclear rocket.

Most of the recent analyses have shown conclusively that electric propulsion is by far the best method of accomplishing this task, assuming the use of technology that does not require very much additional development[7,21,48,70]. Nevertheless, some authors[46,117] have remained unconvinced that electric thrusters can be developed adequately for this purpose. They seem, however, to have a very weak case, and NASA has adopted ion thrusters for its baseline SPS design[33]; ESA has also been advised to follow this lead[21].

It is interesting to note that the use of electric propulsion allows a greater freedom in the choice of SPS construction strategy. In particular, the primary construction base can be situated in a low orbit, large units being propelled to geostationary orbit for final assembly. This would not be easy to do by chemical means, because it is unlikely that these structures would be strong enough to withstand the accelerations then imposed upon them.

5.1 Chemical rocket systems

Many different inter-orbit chemically-propelled transport systems have been proposed, but most have similar characteristics. In general, they utilise LH_2-fuelled engines, often based on Space Shuttle or other proven technology[120], and transfer times are relatively short, of the order of 10 hours[75]. This is ideal for the movement of construction crews, but, with a specific impulse of around 450 seconds, the consumption of propellant is relatively high. The two-stage example shown in Fig 37 is a fully re-usable LH_2-fuelled system that can be used for transporting 75 passengers plus crew supplies for 90 days, or a payload of 65 tonnes, to the geostationary orbit[11]. It could return a payload of 41 tonnes to low orbit, and would have a mass of 560 tonnes at the beginning of a mission[33]. A much larger version, having a payload of 400 tonnes, has also been described[73]. An advanced cargo-carrying, single-stage design, with a payload of 50 tonnes, is illustrated in Fig 38. As mentioned below, this concept has been the subject of considerable economic analysis[118]. These vehicles are compared with others in Table 18, which also includes details of personnel carrier modules that can be attached to a number of these very flexible designs.

The costs given in Ref 71 of about \$40 per kg of payload seem rather optimistic, in view of the initial cost of the vehicle and the need for 1.9 kg of propellant for each kilogramme of payload delivered, at an HLLV mission cost of \$16 to \$33 per kg. The Boeing figure[43] of \$11 per kg is totally unreasonable, unless it excludes the cost of transporting propellant to low earth orbit; this adds a further \$32 to \$66 per kg to the quoted \$11, or between \$13.3M and \$27.4M to the total cost per flight.

034

Table 18

Chemically propelled orbital transfer vehicles

	Boeing		NASA		NASA	NASA**	NASA‡
	Cargo	Personnel	Cargo	Personnel	Personnel†	Personnel†	Cargo
Reference	43/73	43	71	71	71	11/33	118
Number of stages	2	1	2½*	2½*	2	2	1
Propellant	LH_2	LH_2	LH_2	LH_2	LH_2	LH_2	LH_2
First-stage engines	4 × 470 kN	4 × 470 kN				4 × 200 kN	4
Second-stage engines	2 × 470 kN	-				2 × 200 kN	-
Specific impulse (second)	470	470	455-470	455-470	455-470	470	440-475
Payload - tonnes	400		250	Balance		65	50
- passengers		100		50-100	75	75	-
Initial mass (tonnes)	1290		760			560	189
Propellant required (kg per kg payload)	2.08		1.90			7.08	2.64
Cost - per flight	\$4.52M††		\$10M	\$10M	\$7M-\$22M		
- per kg	\$11††		\$40				\$110-180
Development cost				\$150M			

* Uses expendable LH_2/LO_2 tanks, mass 11 tonnes. ** Based on Boeing work. † Dedicated personnel carrier.

†† Excludes cost of transporting propellant to low orbit. ‡ Analysis only, not a specific design.

A more recent cost analysis[118], based on LO_2/LH_2 technology (Fig 38), suggests that the orbit transfer mission will require $110 to $180 per kg of payload. It was shown that costs are strongly dependent on a number of parameters and assumptions, which include the following:

(a) Payload. The range 20-200 tonnes was considered. A sharp decrease in cost, of about 25%, results from increasing this parameter from 20-100 tonnes. Thereafter, the advantage is less, as indicated in Fig 39.

(b) Staging philosophy. Cost is insensitive to the relative sizes of the stages in a two-stage vehicle, but a single-stage version is definitely more expensive (Fig 39).

(c) Engine specific impulse. There is a strong dependence on this parameter. Increasing it from about 440-475 seconds causes a reduction in cost of about 16%, as shown in Fig 40. The technology required to benefit from the highest values is almost available[19,121].

(d) HLLV costs. There is a linear relationship between orbit transfer costs and the cost of transporting materials and propellants into LEO, as also indicated in Fig 41. The HLLV cost was assumed to be $10 to $50 per kg.

(e) Re-usability. It is clear from this analysis that re-usable vehicles provide the most economic option, despite the fact that they must be returned to LEO at the end of each mission.

(f) Thrust-to-weight ratio. The start-of-mission thrust to weight ratio has a moderate influence for low thrust orbit transfers, where this ratio is in the range 10^{-3} to 10^{-1}; going from 10^{-3} to 10^{-2} might decrease cost by 7-8%.

(g) Number of rocket burns during orbit transfer. This parameter also has a moderate influence for low thrust missions, with a saving of perhaps 8% resulting from increasing the number of burns from two to five.

5.2 Electric propulsion systems

As shown in Table 18, the specific impulse of a chemical propulsion system is limited to about 470 seconds, owing to the fact that the rocket's exhaust energy is derived from the heat released in combustion, and this cannot be increased. No such limitation occurs with electric propulsion, in which electrically charged particles, usually positive ions or liquid droplets, are accelerated by intense electrostatic or electromagnetic fields. Theoretically, the exhaust velocity, and thus the specific impulse, can be increased without limit, until the speed of light is reached. In practice, the most highly developed devices, ion thrusters, give specific impulses between about 2500 seconds and 15000 seconds, using argon as a propellant, and 25000 to 30000 should be achievable in the near future. These values indicate that a reduction in the propellant required for a given mission of at least an order of magnitude should be immediately attainable. Thus the 2 kg of propellant per kg of payload required by a chemical orbital transfer vehicle can be reduced to less than 0.2 kg per kg, and a value of around 0.05 kg per kg should be easily reached.

Looking further into the future, the potential of ion thrusters can be gauged from the transient performances of ion accelerators developed to provide sources of high energy particles for controlled thermonuclear reaction experiments, typically neutral beam injectors for Tokamak devices. For example, Ohara[122] has described a source which will provide 15 amperes of hydrogen ions at 75 keV from a 12 cm diameter grid system. This grid system is designed to separate the beam extraction and acceleration processes; it could be immediately applied to ion thrusters. The equivalent specific impulse, for argon, is 60000 seconds, allowing the propellant mass to be reduced to below 0.02 kg per kg of payload, and the current density is such that 375 amperes could be passed by grids of 60 cm diameter.

For the SPS application, electric propulsion can be used in two basic ways. The most obvious technique is to replace the chemical engines on the orbital transfer vehicle with electric thrusters, deriving their energy from dedicated solar arrays or, possibly, a nuclear power source. Such a system implies that the majority of constructional tasks will be carried out in geostationary orbit. The alternative is to construct large sections of the SPS in low earth orbit and then to attach to them arrays of ion thrusters for propulsion to geostationary orbit, where finally assembly takes place. The latter has been adopted for the NASA baseline system[33].

Of course, an electric propulsion system is not without disadvantages. The most serious of these is the long transfer time, which is of the order of months[68]. This results in degradation of the solar cells used to provide the power needed by the thrusters, due to damage caused by the impact of energetic particles in the earth's radiation belts. Consequently, the development of annealing techniques to restore these cells to their original condition[11] is important to the economics of this orbit transfer method. Another disadvantage of the long transfer time is the increased chance of accidental collisions with other orbiting objects[66,123].

034

From an economic point of view the purchase and maintenance costs of an electric propulsion system exceed those of a chemical vehicle, owing to increased complexity. However, this additional expenditure is small compared to the benefits obtained from fuel savings. The development cost of the thrusters and their power conditioners should not be included in this economic equation, because they will be needed for orbit control and station-keeping, irrespective of the technique chosen for the task of transporting hardware to the geostationary orbit.

5.2.1 Types of electric thruster

For the last two decades, a very large variety of electric propulsion devices has been developed, mainly in the USA and in Europe[124,125]. Most of these could be used for orbit transfer missions, but, as indicated below in Table 19, only the Kaufman ion thruster can, at present, be considered suitable for application to an SPS project. Its main disadvantage is a rather small thrust density, but this is of relatively low importance in this context. Its most serious competitor is the magnetoplasmadynamic (MPD) arc thruster, which has a much higher thrust density, but, at present, a very much lower efficiency and durability. It is also at a primitive state of development.

The thrusters in question can be briefly described as follows:

(i) Kaufman ion thruster. In this device, the propellant gas is ionised by a dc electrical discharge between a hollow cathode and a cylindrical, concentric anode[126]. The discharge chamber is enclosed at one end by a pair of carefully aligned, closely spaced grids. A large electric field imposed between these grids extracts and accelerates the positive ions from the plasma in the discharge chamber, forming an intense ion beam and producing thrust. The positive space charge of the ion beam is neutralised by electrons from an external cathode, and a magnetic field applied to the discharge chamber enhances the efficiency of the ionisation process. The exhaust velocity, and thus the specific impulse, is limited only by the power available and the intergrid breakdown voltage.

The thruster shown schematically in Fig 42 illustrates the principles of operation of this device; it is assumed there that the propellant is mercury vapour, but almost any material that is in gaseous or vapour form at about 400°C or below may be used. Argon is certainly satisfactory.

The Kaufman thruster has reached an advanced stage of development, a considerable amount of flight experience having already been accumulated[127,128]. Several devices are almost ready for application; these range in size up to 30 cm diameter[129], and tests have also been carried out on a thruster of 1.5 metres

034

diameter[130]. Thruster life-testing experience in the laboratory extends to at least 15000 hours[131,132] and critical components have operated for much longer times[133]. Successful space operation of one thruster experiment extends over a period of 9 years and thousands of hours of running[128].

(ii) MPD arc thruster. In an MPD arc thruster, an intense dc discharge, with current densities many orders of magnitude greater than in the ion thruster, both ionises and accelerates the gaseous propellant, producing an electrically neutral exhaust plasma and thrust. A typical device[115], shown schematically in Fig 43, includes an axial cathode with a downstream conical or cylindrical anode. The propellant may be introduced either around the cathode, through holes in the cathode itself, or at some downstream location.

Two processes are involved in the acceleration of the exhaust plasma. The simple Joule heating of the plasma is probably dominant in low energy thrusters, operating in the kilowatt power regime. However, electromagnetic acceleration rapidly increases in importance as current and power levels rise. In this mechanism, the central discharge to the cathode pinches down to a very small diameter, owing to the compressive force exerted by its own magnetic field B_θ, and this field interacts with the radial current component flowing to the anode, J_r, to produce an extremely large $J_r \wedge B_\theta$ force which accelerates the plasma away from the thruster[134]. An external magnetic field can be applied to assist this process, but this is most effective at lower power levels.

Although MPD thrusters are comparatively simple, the electrical efficiency η_e (kinetic energy in the exhaust divided by total input power) of most devices has proved to be disappointingly low[135,136], usually 20-30%. In addition, their development status is primitive in comparison with that of ion thrusters. A major problem is that of electrode erosion and, therefore, of durability, at the megawatt power levels envisaged for space use. At these power levels, continuous operation may not be possible, introducing switching problems; indeed, all laboratory testing is currently done in a pulsed mode.

Despite present limitations, recent work has shown that these devices offer considerable future promise. For example, the Princeton group[137] has found that the major loss, the heat transmitted to the anode following dissipation in the anode sheath, falls from 50% at 200 kW to only 10% at 20 MW, representing considerably increased efficiency. It has been found[138] that a critical parameter is $I^2/\dot{m}$, where I is the discharge current and $\dot{m}$ the propellant flowrate. The best configuration limits this to about 100 kA^2-s/g, corresponding to a specific impulse with argon of roughly 2000 seconds. An increase by a factor 3 will be necessary to achieve 5000 seconds[115]. Assuming that this is possible, the thruster characteristics shown in Fig 44 may be predicted for a 1 MW power input. It will be seen that an efficiency of about 60% should be attainable, and an increase of power to 10 or 20 MW should allow further gains to be made.

(iii) RF ion thrusters. These devices are similar to Kaufman thrusters, but make use of an RF discharge instead of a dc discharge[139]. Although they peform in a similar manner to Kaufman thrusters, at least in the smaller sizes (about 10 cm diameter), they suffer from a number of disadvantages, which include the basic inefficiency of the RF coupling mechanism, lifetime limitations caused by shorting of the RF field by metallic coatings sputtered onto the inside of the cylindrical discharge chamber, and control problems. There seem to be no significant compensating advantages.

Most of the work in this field has been concentrated on a 10 cm diameter device. However, preliminary investigations have been reported of larger thrusters, up to 35 cm diameter, intended for primary propulsion[140]. Efficiency does not increase with size so rapidly as with the Kaufman thruster, owing largely to the problem of uniformly injecting energy into the discharge chamber for the ionisation process; the skin effect tends to cause most of the ionisation to occur around the periphery of the discharge chamber, leaving a volume of relatively low plasma density in the centre.

(iv) Colloid thrusters. A colloid thruster depends for its operation on the electrostatic spraying of minute droplets of a liquid from the ends of fine needles, tubes or slits. The liquid must be slightly conducting, and is typically glycerol doped with sodium iodide. The droplets are formed because the liquid meniscus at the spraying site becomes unstable in the presence of an intense electric field, set up between the metallic needle, tube or slit and an external electrode[141].

Such devices give moderate efficiency and specific impulse. They have also reached an advanced stage of development, but a planned flight test[142] was abandoned owing to lifetime problems. These, together with the low thrust attainable per emitter and environmental problems associated with the propellant, make them unsuitable for the SPS application.

(v) Field-emission thrusters. These are similar in some respects to colloid thrusters, but the spraying process causes the emission of positive ions rather than droplets, owing to the use of very high electric fields and propellants with low ionisation potentials. The emission site is a sharp point or edge covered, by a wetting process, with a thin film of the propellant, or sharp cusps formed by instability processes on the meniscus at the end of a tube or slit[143].

As the exhaust velocity can be very high, and therefore the specific impulse, the electrical efficiency can be good. However, much propellant is wasted by evaporation, so the mass utilisation efficiency η_m is relatively poor at the present. Here, η_m is defined as the fraction of the propellant mass fed to the thruster which is actually employed in the exhaust in producing thrust. Additional disadvantages include the low thrust obtained from each emitter, the very primitive development status, and the unacceptable chemical characteristics of most propellants (nearly all published work has been done using cesium).

(vi) Contact ionisation thruster. In this device[144], ionisation of the vapour of a material having a low ionisation potential, typically cesium, is achieved by passing it through a heated porous tungsten plate. The positive ions emerging from the plate are subsequently accelerated by a high electric field, giving a very large specific impulse. However, the thermal radiation loss from the tungsten surface gives a low η_e, and other problems result from cesium condensation on ceramic insulators. The development status is not very advanced and adequate durability has not been proven. This thruster is far from suitable for the SPS application.

(vii) Other devices. Many other thrusters have been investigated in the past, but work on most has now ceased, owing to the discovery of serious problems or disadvantages. At least three broad classes can be identified: very high current pulsed discharge thrusters, such as conical z-pinches[134] and coaxial plasma guns[148], steady-state $J \wedge B$ acceleration of plasmas produced by other mechanisms[149], and steady-state RF acceleration by applying travelling waves to a separately derived plasma[150].

All these devices suffer from low electrical or mass utilisation efficiency, lack of durability, or requirements that would be difficult to meet in a space application. The latter include the need for large, high voltage condenser banks for the very high current pulsed devices, although it should be pointed out that very small versions of these thrusters have been successfully developed and used in applications where efficiency was not important[151].

034

The only device omitted from the above survey that might be of use in the SPS context is the magnetoelectrostatic containment (MESC) thruster[146]. This is

Table 19

Summary of characteristics of electric thrusters (1976-77)

Type	Kaufman ion	RF ion	MESC ion	MPD*	Colloid	Field-emission	Contact ionisation
References	129, 145	140	146	135	125	143	144
Acceleration mechanism	E/S	E/S	E/S	E/M, Joule heating	E/S	E/S	E/S
Propellant - usual	Hg	Hg	Cs	Argon	Glycerol†	Cs	Cs
- acceptable alternative	Argon	Argon	Argon	N_2	None	None	None
Exhaust exit dimensions	30 cm diameter	35 cm diameter	12 cm diameter	10 cm diameter	3 cm diameter annulus	3 cm linear emitter	5.1 cm × 0.6 cm rectangle
Thrust (mN)	200	160	17	140×10^3	0.5††	~2.5††	1.5
Power (kW)**	5.4	3.6	0.34	6000	~0.01	~0.16	~0.12
Usual maximum specific impulse (second)	5000	3360	3270	2400	1000-2000	9000	6700
η_e	0.93	0.79	0.81	0.31	0.7	~0.9	~0.4
η_m	0.90	0.88	0.97		0.2-0.8	~0.7	0.99
Maximum life-test duration (hour)	10000	None‡‡	600◆	None	475‡	None	None◆◆
Environmental acceptability	Excellent	Excellent	Excellent	Excellent	Poor	Very poor	Very poor
Development status	Flight ready	Very poor	Medium	Very poor	Medium	Very poor	Low

* Values given apply to ms pulsed operation. ** Excluding power dissipation in power conditioning electronics.

† Doped with NaI. †† Easily stacked to increase thrust by a factor of 10 to 100

‡ But 6500 hours on modular multiple needle thruster (Ref 142). ‡‡ But 8000 hours on 10 cm diameter thruster.

◆ But 2600 hours on smaller device (Ref 147). ◆◆ But components to about 5000 hours.

E/S = electrostatic. E/M = electromagnetic.

similar in most important respects to the Kaufman thruster, the major difference being the type of magnetic field configuration used in the discharge chamber. A divergent field of a few 10s of gauss is used in the Kaufman device, whereas the MESC thruster uses a very localised cusped field, of 1000s of gauss, around the periphery of its discharge chamber. This can promote, under some circumstances, a higher value of η_e, but, to a potential user, its characteristics closely resemble those of the Kaufman device. It should be equally acceptable, provided that units of a reasonable diameter can be produced.

It may be concluded that, at the present time, only ion thrusters are suitable for carrying out SPS propulsion tasks, and that, of the three types available, the Kaufman device is the most promising, with the MESC being, possibly, a viable alternative. This conclusion has also been reached by many other authors and study groups[33,70,115], who have paid particular attention to existing technology. Others, who have been more speculative, have advocated use of MPD thrusters, despite their low development status[123].

If Kaufman ion thrusters are adopted for this purpose, the 30 cm device currently undergoing flight qualification[129] with mercury propellant could readily be modified to employ argon at an increased specific impulse and thrust. Many such thrusters could be clustered together to provide adequate propulsive effort, and the proven durability (Table 19) should be sufficient for initial missions. Thruster life-time is mainly limited by cathode degradation[152], but various techniques are available for overcoming this problem[126].

To reduce the complexity of the SPS thrust subsystem, a larger diameter thruster is desirable. Scaling laws exist[125,126] which will allow such a thruster to be designed with confidence in its capabilities, although certain technical problems would require solution. Possibly the major difficulties would concern the production of a large diameter grid system with adequate dimensional stability, and the operation of several hollow cathodes in parallel. On the other hand, the change from mercury to an inert gas would ease many materials problems.

As a first step on the road to producing higher thrust levels, the NASA/Hughes 30cm thruster has been operated at power levels exceeding 10 kW[145]. Some of the data obtained are summarised in Table 20, together with extrapolations to the use of argon. For comparison, the desirable characteristics of a much larger device[115], of 120 cm diameter, are also presented. The latter thruster is shown schematically in Fig 45. Data are also given for a device of intermediate size, 60 cm diameter[153]. It can be seen that the 30cm thruster has already demonstrated a useful performance from the point of view of SPS missions,

Table 20

Kaufman ion thrusters for SPS application

Thruster type	Existing NASA/Hughes 30 cm diameter					60 cm diameter	120 cm diameter
	Standard	Large I_B	Large V_B	Large V_B and I_B*			
Reference	129	145	145	-	-	153	115
Propellant	Hg	Hg	Hg	Hg	Argon	Argon	Argon
Beam accelerating voltage (kV)	1.1	1.28	5	5	5	4.2	6
Beam current (ampere)	2	4	2	4	4	96	80
Specific impulse (second)	2985	3400	6293	6364	14272	13000	16000
Total power (kW)	2.6	6.0	10.4	20.9	20.9	421	500
Thrust (newton)	0.13	0.29	0.29	0.58	0.26	6.4	5.8
η_m	0.90	0.95	0.89	~0.90	~0.90	~0.90	~0.89
η_e	0.84	0.85	0.96	0.96	0.96	0.96	0.97

* Estimated performance.

V_B = net beam accelerating potential

I_B = total beam current.

and that a 60 cm device, operated near its limit, can offer well over 6 newtons of thrust at an SI of 13000 seconds. Some of the more important scaling relationships for thrusters using argon propellant are illustrated in Ref 153.

5.3 Resistojet systems

Resistojets use electrical energy to increase the flow velocity of a gas exhausting from a conventional divergent nozzle, thereby raising the specific impulse to a value intermediate between that attainable by a chemical rocket and that produced by an electric propulsion device. If hydrogen is used[154], the specific impulse can reach about 800 seconds, nearly twice that attainable with LH_2/LO_2 rocket motors, but the power consumption can be large. Although the heater technology is not easy, there should be no difficulty in developing a hydrogen resistojet for the SPS mission, should one be needed; the use of argon or of any other gas is not advocated, as it would seriously reduce the specific impulse.

The use of hydrogen resistojets for orbit raising missions was suggested as long ago as 1970, with emphasis on combining these devices with ion thrusters to optimise the effective specific impulse in power limited cases[155]. Re-usable space tugs for carrying large payloads to geostationary orbit, using resistojets and ion motors, have also been studied[156]. However, despite encouraging results from these investigations, the resistojet fails to meet performance criteria necessary for the economic success of an SPS system; it can be shown[157] that the specific impulse of the orbit transfer vehicle must exceed about 1000 seconds.

A separate analysis[71] has also shown that the hydrogen resistojet would require a far greater mass of propellant than competing electric propulsion systems for the SPS orbit transfer mission, despite the assumption that a specific impulse of 1000 seconds can be achieved. This study indicated that various electromagnetic acceleration devices would be the most effective, but the initial assumptions concerning the available performance levels appear to be very optimistic. Conversely, pessimistic figures were used for the ion thrusters included in the analysis. However, the resistojet does offer the advantages of simplicity, high thrust density and low cost, which can be important[123].

5.4 Nuclear systems

Solid core nuclear reactors may be used to heat exhaust gases, which subsequently expand through a conventional nozzle. Unfortunately, they are limited in the same way as are resistojets, by the physical and chemical characteristics of the materials that can be used for the reactor and heat exchanger. It is evident that melting points cannot be closely approached, so the exhaust, assuming the use of hydrogen, cannot have a velocity much in excess of 8 km/s[154], giving a specific impulse of around 800 seconds[123]. As mentioned above, this does not meet the SPS criterion[157] of 1000 seconds.

The results are different if these materials limitations can be avoided, as in the gas core reactor system[123]. A specific impulse of about 2200 seconds can then be realised, although the technology is much more difficult. It has been estimated[123] that a system only 7 meters long could produce a thrust of 41 tonnes for a mass of only 32 tonnes. If such a device could be developed, it would allow total transportation costs, for SPS assembly in geostationary orbit, to be reduced to $88 per kg. Its nearest competitor would be an MPD thruster system powered by a nuclear reactor, which could achieve $110 per kg. For comparison, a re-usable chemical vehicle would give transportation costs of $230 per kg, well above the economic limit[9].

The alternative way to employ a nuclear reactor is to use its thermal output to generate electricity, and then feed this power to electric thrusters[50,123]. It has been estimated that, using thermionic converters, a re-usable tug that could be launched by the Space Shuttle would be able to transport payloads to geostationary orbit for around $130 to $150 per kg, the propulsive effort being produced by ion thrusters. If MPD arc thrusters could be developed with an efficiency of 50%, these costs could be reduced marginally, to $120 to $130 per kg. A much larger nuclear electric system, using MPD thrusters, has also been advocated for SPS missions[158]. As shown in Fig 41, this can apparently be competitive, with about $120 per kg being achievable, although no account has been taken of the development status of the different systems. In fact, it is difficult to draw firm conclusions from costing exercises such as this, owing to the arbitrary nature of most of the assumptions that must be made. This point is illustrated in Fig 41, where additional data from Ref 123 have been included; although both analyses were carried out at the same time, the results differ appreciably, particularly those for the chemical, nuclear electric and self-powered systems.

Despite reservations about the accuracy of published data, it does appear that nuclear electric and gas core reactor systems could find extensive applications in the long term future. It is unlikely, however, that they can be considered for early SPS missions because of their low development status and present day concern regarding the safety of nuclear systems in orbit. Much of this concern stems from the uncontrolled re-entry of a Russian nuclear powered spacecraft early in 1978[49], and the public and political opposition that has been aroused by this event, and by worry about nuclear weapons, will not easily be overcome. Nevertheless, efforts are being made to develop orbital reactors, using thermoelectric technology, with power outputs of up to 100 kWe[52].

5.5 Orbital transfer using solar electric propulsion

As already mentioned, there are basically two distinct methods of using electric propulsion systems for the orbit transfer task. One employs a specially developed tug vehicle, which transports materials, subsystems and tools to geostationary orbit, where the SPS is manufactured. The other relies on completed sections of the SPS to supply power to temporarily attached propulsion modules. In both cases, re-use of the hardware is essential to reduce costs, as is the ability to anneal solar cells to restore their output, following degradation in the earth's radiation belts[11].

Assuming that this annealing process will be possible, the second alternative is obviously cheaper, because a dedicated power supply is not needed. This is evident from the relative cost curves in Fig 41, and is a major reason for its choice for the NASA baseline concept[33].

5.5.1 Solar electric tug

The construction of an SPS in geostationary orbit, using a solar electric tug to provide transport from low earth orbit, has been advocated primarily by Marshall SFC and Rockwell[48]. The concept under study is a 5 GW output SPS employing GaAs solar cells and having a final mass of 37 × 10^6 kg. A construction crew of more than 500 would be required to manufacture it from component parts and basic materials, although the actual number depends on the time required for the project, amongst other factors. In addition to transporting components, materials and crews to geostationary orbit, construction machinery, workshops and living quarters must also be placed at the construction site. For a low earth orbit site, these might amount to an additional 5.6 × 10^6 kg, the basic structure contributing 45% of this, the crew living quarters 36%, and the construction equipment 7%[85]. There is no reason to believe that this mass would be substantially different for a geostationary site.

Rockwell have carried out a detailed design of a large solar electric transport vehicle[159] capable of carrying a payload of 4.2 × 10^6 kg to geostationary orbit in 133 days. By employing the latest advances in ion thruster technology, the design overcomes earlier objections to the use of these devices[71], 268 100cm diameter argon thrusters being found adequate to propel this enormous spacecraft. As shown in Fig 46, the spacecraft configuration is based on that of

034

the SPS itself, with GaAs solar cells mounted within trough concentrators formed from plane reflectors, and giving a concentration ratio of 2. The ion thrusters are mounted on a rotary joint to enable them to thrust along the orbital path, whilst the solar array remains perpendicular to the sun's direction; the long axis of the vehicle is perpendicular to the equatorial plane. The major characteristics of this fully re-usable vehicle are presented in Table 21.

Table 21

Characteristics of Rockwell orbit transfer vehicle[159]

Length	2.25 km	Solar cell area	0.90 km^2
Width	1.30 km	Total power, beginning of life	384 MW
Height	1.13 km	Number of 100cm thrusters	268
Empty mass	1.70 × 10^6 kg	Total thrust (maximum)	3490 newtons
Payload mass	4.27 × 10^6 kg	Transfer time	133 days
Argon propellant mass	0.30 × 10^6 kg		

It will be clear from these data that this spacecraft is extremely efficient, from the point of view both of its structure and its propulsion. By any standards, a payload to empty mass ratio of 2.5 is excellent, as is a propellant requirement of only 0.07 kg per kg of payload. The structure was designed so that it could be fabricated by an SPS beam building machine, and to provide a high degree of stiffness, to minimise the consumption of attitude control propellants.

As a large proportion of the total mass of an ion thruster system is contributed by the power conditioning electronics[126], operation of the thrusters of an orbital transfer vehicle directly from the solar array is obviously desirable; with hundreds of thrusters to supply, the mass saving would be considerable. This concept has been adopted in the Rockwell design, the power for the ion beam of each thruster being taken directly from the array. Separate, smaller arrays feed the discharge current and accelerator grid, via voltage limiters, and only the auxiliary supplies, such as heaters, are provided from a power conditioner. The latter has an output of only 278 watts, whereas the total power consumption of the thruster is 1.175 MW. Thruster characteristics are shown in Table 22, from which it will be seen that the performance required is slightly below that of the

60cm thruster referred to in Table 20. Scaling the latter to 100 cm could give a beam current of 267 amperes, whereas 225 amperes is required. In addition, a propellant utilisation efficiency of 0.82 has been assumed, whereas 0.90 should be readily attainable.

Table 22

Characteristics of argon ion thruster[159]

Beam diameter	100 cm	Beam power	1125 kW
Beam accelerating voltage	5 kV	Discharge power	40 kW
Beam current	225 amperes	Auxiliary power	0.28 kW
Specific impulse	13000 seconds	Total input power	1175 kW
Thrust	13 newtons	Mass utilisation efficiency	0.82

Other types of solar electric tug have been proposed, ranging in size and capability from a few tonnes of payload[160] to a huge device capable of transporting an SPS in a single trip[159]. They all provide significant benefits as regards savings of propellant, and therefore of costs, and the basic propulsion technology is available now, assuming that ion thrusters are used.

5.5.2 SPS self-propulsion technique

The self-propulsion mode of orbit transfer is particularly attractive for SPS deployment, owing to the availability of large amounts of electrical power. All types of electric thruster can be used for this purpose, although, as described previously, the Kaufman ion thruster has the highest efficiency and is at the most advanced stage of development. Of course, to use this technique, large sections of the SPS must be assembled in low earth orbit prior to their transfer to geostationary altitude, where they are joined together, forming a complete spacecraft. This implies that the major construction facility must be in low orbit, but that a crew of significant size must also be placed in the synchronous orbit. For the NASA/Boeing 10 GW SPS[33], a 1 year construction period requires 480 astronauts in low orbit and 60 in geostationary orbit. The construction bases would weigh 5870 tonnes and 770 tonnes respectively.

An alternative is to construct the complete SPS in low orbit before transferring it. However, it has been shown[48] that the gravity gradient forces on such a massive structure are over 200 times larger in low orbit than in geostationary orbit. Hence a satellite built entirely in low orbit would have to be substantially stronger, and thus heavier, than one fabricated in synchronous orbit[42]. In addition, the consumption of attitude control propellant during the transfer manoeuvre would be much greater for the complete SPS; the propellant mass varies as the cube of the length of the structure[159] (moment of inertia/torque), so if, for example, a structure was divided into 10 equal lengths, the total requirement would be only 1% if they were transported separately. Nevertheless, serious consideration has been given to propelling a complete satellite to the higher orbit[42].

Possibly the most detailed investigation of the part assembly method has been carried out by Boeing, with reference to their planar 10 GW SPS design which uses silicon solar cells without concentrators[7]. This is shown schematically in Fig 3. It is proposed that the spacecraft would be constructed in eight separate sections[33], each of equal dimensions, but two of them having 5GW microwave antennas attached. The four corners of each section would carry propulsion modules containing large arrays of argon ion thrusters operating at a specific impulse of 7000 seconds. The device shown in Fig 45 was designed to fulfil this role. A standard SPS section would need 2400 such thrusters for a transfer time of 180 days, and the sections including antennas would require 6400 thrusters. Of course, they would be re-usable. A typical non-antenna section is illustrated in Fig 47.

It should perhaps be pointed out that the assumed performance of these thrusters is well below the maximum possible, as will be seen by comparing Table 22 with the right-hand column of Table 20. If the current density was raised to the value assumed for the 100cm thruster, a beam current of 324 amperes would be attainable and, if the specific impulse was also increased to 13000 seconds, the thrust would become nearly 19 newtons, rather than only 1.89 newtons. Thus 240 thrusters would be needed, rather than 2400, but at the expense of a much greater power consumption. These and other data are presented in Table 23, where it will be seen that the argon propellant requirements are divided by nearly a factor 2 by use of the higher specific impulse. At an HLLV cost of $20 per kg, this represents a saving of over $200M per satellite. In addition, Boeing have assumed the use of an LH_2/LO_2 system for attitude control, requiring a propellant mass of 11.6×10^6 kg. The use of similar ion thrusters for this purpose, perhaps mounted on gimbals, would reduce this mass to only 0.42×10^6 kg, representing a further saving of $220M (but see section 5.5.3).

Table 23

Characteristics of Boeing 10 GW SPS self-propelled sections[33]

Thruster type	Boeing ion thrusters (Ref 33)		Uprated ion thrusters (derived from Table 22)	
Type of SPS section	Non-antenna	Antenna	Non-antenna	Antenna
Number of sections	6	2	6	2
Transfer time (days)	180	180	180	180
Section mass (10^6 kg)	8.7	23.7	8.7	23.7
Total thrust from ion thrusters (newton)	4500	12200	4500	12200
Assumed specific impulse (second)	7000	7000	13000	13000
Assumed thrust per thruster (newton)	1.89	1.89	18.7	18.7
Number of thrusters needed	2400	6400	240	652
Power per thruster (kW)	125	125	1680	1680
Total power (MW)	300	810	403	1095
% of section solar array needed	13	36	18	50
Mass of argon propellant (10^6 kg)	2.0	5.6	1.08	3.02
LO_2/LH_2 AOCS propellant (10^6 kg)	1.0	2.8	1.0	2.8

It is clear from this example that a very careful analysis is necessary to minimise the cost of the orbit transfer. It must take into account such factors as the performance likely to be available from ion thrusters, the interest payable on capital employed during the transfer, the size and mass of the final spacecraft as a function of the number of transfer sections, and the method of providing attitude control.

Although the above method has been adopted for the NASA baseline SPS concept, many other variations have been proposed for other spacecraft configurations. For example, an earlier Boeing study[66] of a larger SPS, which was 29 km long and 5 km wide and employed a concentration ratio of 2, suggested that it should be divided into 16 sections with dimensions of 2.5 × 3.6 km. The argon ion thrusters were to be employed as indicated in Fig 47, but with a specific impulse of only 5500 seconds. Boeing have also proposed[115] using two arrays of ion thrusters to propel 6 × 1 km sections of an SPS, as depicted in Fig 48. For this option, a specific impulse of 9000 seconds was selected and a transfer time of 200 days, with a motor-generator concept being introduced to transform the 40 kV array power to the voltages and currents required by the thrusters. A further alternative[115] envisaged splitting a 10 GW SPS into four sections, each of 22×10^6 kg mass, with propulsion by four arrays of argon ion or MPD thrusters.

It should finally be mentioned that the self-propulsion technique has also been adopted for heat engine SPS concepts[47]. In particular, a Brayton 10 GW system was shown to be most economic when the SPS was split into 16 self-powered sections for the orbit transfer. This approach proved to be 10-20% cheaper than the alternative chemical rocket method, and required only half as many HLLVs.

5.5.3 Orbit transfer strategy

Although a considerable amount of analysis has been carried out to determine optimum spiral orbit raising strategies using electric propulsion[68], structures as large as an SPS have been considered only rarely[66,71]. Their size introduces added complexity, especially at the start of a mission, when the aerodynamic drag of the residual atmosphere[71] on large, lightweight areas can cause orbit decay and attitude control problems. In addition, the need also exists to continually rotate the active solar arrays so that they are always perpendicular to the sun's direction. Both of these difficulties make the operation more complex and add to propellant requirements. The effect of solar radiation pressure must also be taken into account. This becomes comparable to aerodynamic forces at an altitude of 650 km[161]. A further effect that must be included is the shadowing of the solar cells by the earth, which occurs for an appreciable time on each orbit at low altitude[68].

It is difficult to predict many of these effects, owing to their dependence on the geometry and mass distribution of the objects in question. However, as regards aerodynamic drag, it can be shown that this is a function of the parameter C_DA/W_0, where C_D is a non-dimensional drag coefficient, which depends upon geometry, A is the frontal area of the object, and W_0 is its mass. A large, low mass object has a high value of this parameter, and thus its orbit decays rapidly. Examples of decay rates are given in Table 24.

Table 24

Altitude loss per orbit for various objects at 500 km altitude[71]

Object	C_DA/W_0 (m^2/N)	Altitude loss per orbit* (m)
Compact spacecraft	0.0006	7.3
EVA astronaut	0.0016	20
Empty large propellant tank	0.0048	61
Complete SPS	0.32	4054
Piece of solar blanket	0.48	6100
Piece of solar concentrator	4.8	61000

* Assuming constant attitude relative to velocity vector.

It is evident from the value for a complete SPS that this effect is very important at low altitude. However, it falls off rapidly as altitude is gained, the residual atmospheric pressure dropping by more than an order of magnitude between 500 and 800 km.

The problem of maintaining the array perpendicular to the sun's direction during the spiral orbit-raising manoeuvre has been considered in detail by Boeing[43] for the case of the transportation of a 10 GW SPS in 16 sections, each measuring 4.14 × 2.5 km. This concept employs silicon solar cells with concentrators, and about 22% of the array is needed for the orbit transfer, using argon ion thrusters mounted at each corner, as in Fig 47. The basic mass of the section is 5.56×10^6 kg, and an additional 10^6 kg is necessary to convert it into the self-propulsion configuration if solar cell annealing is not possible.

034

The way in which the thrust vectors must be changed throughout each orbit to counteract gravity gradient torques and to increase the orbital velocity is illustrated in Fig 49. This diagram is appropriate to the first few days of an 180 days transfer, and it will be seen that, at this low altitude, much of the propulsive effort has to be devoted to keeping the array correctly aligned. In fact, within the assumptions of this study, the thrust available is inadequate for this purpose if the ion thruster system is sized for a transfer time exceeding 200 days.

Although the ion thrusters can carry out all attitude control functions normally, this is not true when the solar array is in earth shadow. Chemical thrusters, assumed to be LH_2/LO_2, must then be used; if they were not included, the satellite section could accelerate to a 0.1 degree per second rotation so that, upon emerging into sunlight again, it would have rotated almost 180°, and be facing away from the sun. However, as this effect diminishes rapidly as altitude is gained, the chemical propulsion system need not be operative for the complete mission.

Apart from causing the spacecraft to be equipped with a chemical propulsion system, the repetitive crossing of the earth's shadow obviously lengthens the duration of the mission[68]. The time of eclipse during any one orbit is a function of the angle between the earth-sun line and the normal to the orbital plane, as well as of the attitude of the spacecraft. It thus depends on the time of year and on the orbital inclination. However, it has been shown[71] that, in the worst case, where the sun is continuously in the orbital plane, the time in darkness is only about 18% of the total time[159].

Orbit transfer strategies have been considered for types of spacecraft other than those depicted in Figs 47 and 49, but the basic principles are always the same. For example, Boeing have analysed[43] the equivalent mission for a section of a heat engine SPS powered by three arrays of ion thrusters, as shown in Fig 50. Although the pointing requirements may be rather more stringent in this case, the smaller dimensions and the concentration of much of the mass near the centre of mass cause the effects of gravity gradient torques to be much less. Consequently, a much smaller proportion of the propulsive effort has to be devoted to attitude control, and the transfer time can therefore be shorter. In addition, less chemical propulsion is needed during eclipse, 0.27×10^6 kg of LO_2/LH_2 being required, rather than 0.38×10^6 kg. Another advantage is that the spacecraft energy collection system does not suffer from degradation, as do solar cells, during its passage through the earth's radiation belts.

034

5.5.4 Environmental effects during orbit transfer

The two main environmental effects expected during orbital transfer are both potentially very severe; they are solar array degradation, and impact damage by other orbiting objects and meteorites. The latter problem exists for all types of SPS system, whereas the former is mainly applicable to photovoltaic types. An additional effect to be considered is the impact of the spacecraft themselves on the environment of the ionsphere and magnetosphere during transfer operations.

Solar array degradation during orbit transfer has been dealt with in detail on a number of occasions[71,159,162]. The magnitude of the effect, which is due almost entirely to energetic protons, is illustrated in Fig 51[68]. It will be seen that large losses of power are inevitable, especially for long transfer times, but that the initial orbital altitude and the exhaust velocity of the ion thrusters have little effect. The data in Fig 51 are for thin silicon cells; Fig 52 presents the equivalent curve for gallium arsenide[159].

There are three possible approaches to overcoming the degradation problem. The most obvious is to protect the solar cells with thick cover glasses, but, for GaAs cells, these would have to stop all protons with energy up to 10 or 12 MeV[159]. Such cover glasses would be prohibitively heavy, and would also reduce cell efficiency via absorption of solar radiation. The same is true for silicon cells.

The second method is to start the mission with an over-sized array, but this leads to substantial cost and mass penalties[43,159]. It can also distort the optimisation of thruster specific impulse, causing a drastic reduction in the optimum value, so that only a relatively small array area is used during the orbit transfer[43]. As an example of the mass penalty, it is of the order of 10^6 kg for an array sized to give around 600 MW at beginning of life. Of course, this mass increase is doubly undesirable, because it results in the expenditure of more attitude control propellant.

However, the third proposal offers hope that the degradation can be repaired by a thermal annealing process[7,9,11]. For silicon cells, it is anticipated[9] that annealing at a temperature of 500°C can eliminate all damage; this has been demonstrated experimentally[163]. It has been found that the best results are [illegible]; electron beams preferentially heat the surface of a [illegible] lasers are effective only with thick cells. Although an earlier [illegible] GaAs cells do not degrade appreciably under [illegible] by more recent results[159], including [illegible] accepted that successful annealing can be performed at a much lower temperature than with silicon[42]. In fact, it is claimed that complete annealing can be carried out at only 125°C. Consequently, if a solar array is operated at a temperature exceeding this value, as would be the case with a concentration ratio of 2 or more, GaAs cells would be totally self-annealing[10,42]. Such high temperature operation is feasible because the efficiency of GaAs cells falls only slowly with increase in temperature.

The available evidence suggests that annealing will be possible for either type of cell. Although more difficult with silicon, this material does have other advantages over GaAs, and it has therefore been selected for the NASA baseline SPS design[33].

The problem of collision damage has been analysed in detail by both NASA[71,123] and Boeing[43,165]. This work has shown that the flux of man-made objects in near-earth space, although small, is large enough to present a potential hazard to any SPS. It is orders of magnitude greater than the flux of natural objects of comparable relative momentum or kinetic energy, and is continually increasing. The flux of man-made objects is much greater in low orbit than at geostationary altitude, so this must be considered in selecting a construction site and an orbit transfer technique. For example, in 1973 over 90% of all space debris occupied orbits intersecting likely SPS construction orbits between 500 and 1500 km[71].

One estimate[43] of the flux of objects likely to be encountered by an SPS is given as a function of altitude in Fig 53. This includes values derived from known orbiting satellites and debris, as in 1975, and predicted values for the year 2000. The calculated total number of collisions per complete SPS is shown in Fig 54, as a function of altitude, for a 10 GW satellite self-propelled to geostationary orbit by argon ion thrusters. It can be seen that, even with the present population of this region of space with man-made objects, there will be a large number of damaging impacts by items at least 3 m^2 in size.

The numerical size of the problem can be illustrated by reference to the NASA estimates presented in Table 25[71].

There are, basically, two answers to this problem. One is to detect and avoid objects that might cause damage, the other is to clear away such debris. In general, the SPS will have available sufficient propulsive effort to enable avoiding action to be taken successfully in the majority of cases[43]. This propulsive effort can produce an acceleration of about 5×10^{-4} m/s, which is adequate to move an SPS section, during orbit transfer, through a distance equivalent to

034

its own size in about an hour. Thus, it should be possible to avoid orbit transfer collisions.

Table 25

Estimates of the number of orbiting objects and the number of impacts with an SPS per year in the altitude range 500-1500 km

Year	Number of trackable objects	Spatial density ($\times 10^{-9}/km^3$)	Impacts by trackable objects*	Total impacts*
1973	2100	3.1	46	117
1995	7600	11.1	165	419
2015	12600	18.4	274	695
2035	17600	25.7	383	971

* Per year, for SPS with area of 144 km^2.

Collisions during construction in low orbit and during operation must be dealt with by clearing up the debris by use of a special purpose vehicle[43]. An alternative would be to protect the SPS or construction base by an interceptor vehicle, which would place itself in the way of the approaching object. It would be equipped with special energy-absorbing materials to avoid impact damage.

Although perhaps not causing as much concern as the pollution from the HLLV in the troposphere and stratosphere (Fig 55), careful investigation is undoubtedly required of the effects of both the HLLV and orbital transfer vehicles on the outer reaches of the atmosphere, the ionosphere, and magnetosphere. In the case of the orbital transfer vehicles, both rocket and ion thruster effluents must be considered.

Preliminary estimates[15] suggest that the high energy beams from the ion thrusters used for orbit transfer propulsion and, in geostationary orbit, for station-keeping and attitude control of the completed SPS, will significantly perturb the magnetosphere, particularly the plasmaspheric region. Both particle density and total energy content will be increased, the latter via Coulomb collisions between the energetic ions and ambient plasma. The significance of these effects must be assessed.

034

Two other effects of SPS operation are worth mentioning in the present context. The first is the reflected sunlight and infrared emittance from the spacecraft during night-time. It has been shown[166] that an SPS will be the brightest object in the night sky, apart from the moon, and that 100 satellites will produce a fraction of 0.1 of the moon's visible radiation. This may interfere with optical astronomy. The infrared emission is less likely to be troublesome, because the main component in this region of the spectrum, thermal emission from the lower atmosphere, will dominate.

The second effect is that due to the gas and particular debris resulting from orbit manoeuvres, orbit transfer, and construction and operation activities. Possible results[167] could include the absorption of solar radiation, the modification of the interaction of the magnetosphere with the solar wind, and the formation of an artificial 'meteoroid belt'. Although these could, in turn, influence the weather and interfere with other spacecraft or radio communications, such effects would require average emissions to be between 100s of kg per day and 100s of kg per second. This is extremely unlikely.

5.6 Cost analysis

Many attempts have been made to evaluate the cost of transporting large payloads from low earth orbit to geostationary altitude by means of electric and chemical propulsion. These include comprehensive costing exercises by, for instance, Boeing[43], and the development of an analytical model by NASA Langley[168]. The conclusions of the latter study, which considered only autonomous vehicles, was that insufficient technical data are available to justify making firm choices at the present time. In particular, the cost of chemical transfer systems is dominated by the performance of the HLLV, due to the amount of propellant required, whereas the electric propulsion concept depends critically on initial construction cost,in particular the cost of the power supply; the latter, in turn, is strongly influenced by the degree of re-usability that can be achieved.

Despite these uncertainties, many optimisations have been carried out to determine minimum orbit transfer costs as other parameters are varied, and many actual figures have been quoted. Some of these were given in Table 15, where it was indicated that a cost of between $40 and $200 per kg of payload should be attained. Fig 36 suggested that a value below about $130 per kg must be reached if the SPS is to be competitive, and Ref 115 predicts that $15 per kg may be feasible.

Possibly of greater interest at this stage is the comparison between electric and chemical propulsion costs. Although NASA Langley[168] were unable to come to a firm conclusion, most studies have indicated that electric propulsion, using ion thrusters of proven high efficiency, is preferable. The propellant saved due to the high specific impulse more than compensates for the high initial cost and the long transfer time[7]. This saving is particularly impressive when employing the self-powered concept, as advocated by NASA and Boeing[33] (Fig 41).

It is interesting to compare the results of costing exercises carried out for two very different spacecraft designs, the 5 GW Rockwell concept employing GaAs solar cells and concentrators[42], and the 10 GW NASA/Boeing baseline design[33]. In the former case about $1.2B is saved on the cost of manufacturing one satellite[42], and in the latter about 30% of a transportation cost of roughly $10B[33,66], that is $3B. These two results are in reasonable agreement, when it is recalled that the first SPS has half the capacity of the second.

One consequence of the reduction in propellant requirement, from about 2.1 kg per kg of payload to 0.25 kg per kg[7], is that the number of HLLV launches necessary to construct an SPS is much reduced and, consequently, fewer HLLVs need to be built. The Rockwell estimate[42] for geostationary construction of a 5 GW SPS is that 1092 HLLV launches will be needed if chemical propulsion is used for transportation to geostationary orbit, whereas only 453 will be required if electric propulsion is employed. The equivalent Boeing[66] estimates, for a range of SPS construction rates, are given in Fig 56. In both cases, the use of electric propulsion reduces the number of HLLV launches by about 50%, a substantial saving.

The influence of specific impulse and transfer time on transportation cost estimates[115] can be seen in Fig 57. It is clear that the higher the specific impulse the lower the cost, and that a minimum exists at a fairly low value of transfer time. It should be noted that the curves for ion propulsion are based on existing technology, whereas those for the MPD arc are hypothetical; the indicated performance levels have not so far been achieved.

6 ATMOSPHERIC POLLUTION FROM THE HLLV

A superficial examination of the various SPS concepts that have been proposed suggests that there is no technological reason why this method of producing electricity should not be adopted. It has many advantages, being completely predictable, with an effectively 'free' primary energy source. On currently-accepted assumptions about the hazards of microwaves, the system must be regarded as relatively harmless to the environment[1], producing no atmospheric or water pollution, and far less waste heat than the equivalent conventional or nuclear power station; the most efficient UK station in 1977, Fawley, recorded

034

only 35.2% efficiency[169], whereas the SPS ground rectenna will be about 82% efficient. In fact, the only environmental effect currently causing real concern is the interaction between the microwave beam and the ionosphere[37,38], and this is mainly of interest because of its possible influence on long-distance radio communications. Health hazards associated with the microwave beam can be eliminated by appropriate antenna and rectenna designs[7,8], and the beam pointing system is intrinsically fail-safe.

Unfortunately, this benign appearance is considerably altered when it is recalled that an SPS weighs perhaps 100000 tonnes[33,170] for an output of 10 GW, and this mass must be transported into geostationary orbit from the earth's surface. In addition, large teams of construction workers, their tools, equipment and living quarters must also be placed into orbit. This massive transportation task can obviously have an immense environmental impact, and this possibility must be seriously considered. Certain of these environmental problems, such as launch vehicle acoustic noise, are considered elsewhere (section 4.6), and it is concluded that they impose considerable restrictions on the choice of launch site. In this section, atmospheric pollution will be discussed.

To indicate the possible pollution levels to be expected from the heavy lift launch vehicles (HLLVs) to be employed, it may be pointed out that a single ballistic vehicle with a payload of 391 tonnes will consume about 8900 tonnes of propellant during a single mission[73]. Rockwell have estimated that 1092 such flights will be necessary to construct a single 5 GW SPS if chemical propulsion is used for transportation between low earth orbit and geostationary altitude, 453 if electric propulsion is used[42]. The potential problem is thus very large, and it has already received a limited amount of attention[15,70,171].

6.1 Pollution sources

There are basically three sources of atmospheric pollution from the launch and return of an HLLV. These are the chemical products of the combustion process in the rocket engines, any impurities in the propellants, and chemical compounds produced by the intense shockwaves generated by the passage of the vehicle at supersonic speeds through the atmosphere and by the high temperature rocket exhausts.

The products of combustion depend, of course, on the choice of propellants. If LH_2/LO_2 are used, only water vapour is produced, and the problem is relatively simple to analyse. With hydrocarbon fuels and liquid oxygen, CO_2 will also be produced, making the situation more complex. With solid-fuelled rockets, and liquid propellants of a more exotic nature, such as hydrazine, many more chemical compounds can be formed; these propellants are normally rejected on environmental grounds, and no SPS study has assumed their use. It is easy to understand the reason for this by examining the effect of the Space Shuttle's two solid boosters on the atmosphere. As already mentioned in section 4.4, these use ammonium perchlorate as an oxidiser, with aluminium powder as the fuel and an iron oxide catalyst[19]. The chlorine emitted by 60 launches per year, it has been estimated, will decrease the ozone layer concentration by 0.2%, giving a 0.4% increase in ultraviolet radiation at the earth's surface[91]. Although not serious in itself, this figure indicates that the launch of hundreds or thousands of HLLVs per year would cause serious difficulty, if they were equipped with solid boosters producing contaminants such as chlorine.

In view of current concern over halogens in the atmosphere[90], not only must fuels other than LH_2 and hydrocarbons be regarded with suspicion, but the more acceptable ones must be supplied to a high degree of purity. Apart from halogens, there is considerable concern over the possible effects of sulphur as an impurity[172]. This can occur in quite large proportions in fuel obtained from natural sources, and it can be very expensive to remove.

Nothing can be done to alter the characteristics of the shockwaves produced by an HLLV, once its design has been finalised, so the resulting production of oxides of nitrogen must be accepted. Similarly, the reactions induced by the rocket exhausts, which have the same end products, can only be influenced during the design and development stages. However, environmental considerations may well dictate, for example, that air-augmented rocket systems[65,78] and ramjets[82] are not acceptable for an HLLV. In fact, it may be desirable to minimise the volume of air heated to above 2000 K by any process, because temperatures greater than this produce NO_x, irrespective of the absence or presence of other chemistry.

6.2 The effects of various pollutants

When serious concern was first expressed about the influence of pollutants on the atmosphere, a relatively simple view was taken of the physical and chemical processes occurring and, as a result, many unpleasant consequences were predicted, with, on occasions, rather short timescales. It has since been found that the atmosphere (Fig 55) is vastly more complex, with a large number of chemical, physical and biological processes interacting on a massive scale. It is now accepted that present day knowledge is inadequate to properly model the behaviour of such a system with any accuracy, although attempts are being made to do so[173,174]. As a consequence, many of the earlier predictions have been found to be invalid, particularly those based on incorrect reaction rates[175].

As an example of the revised predictions that have recently appeared, earlier estimates that a fleet of supersonic transport aircraft might cause a disastrous depletion of the ozone layer have been found to be totally invalid[175,176], due to the use of inaccurate chemical reaction rates. It has now been calculated that such aircraft will cause an *increase* of ozone concentration below about 25 km (Fig 58). Similarly, extreme concern regarding the use of fluorocarbons has not been confirmed by experimental observations; no effect on the ozone layer has been found[177].

It must be concluded from these and other examples that an analytical approach to an assessment of pollution effects may well not produce meaningful answers. A simple alternative is to compare the quantity of pollutants emitted from the source in question with existing concentrations and with other existing sources. This approach has been adopted below, where appropriate.

6.3 Comparison of HLLV pollutants with other sources

Since much of the pollution resulting from an HLLV launch will appear in the upper atmosphere, it is of interest to compare the predicted injection rates with those estimated earlier for a fleet of supersonic transport aircraft, using conventional turbojets, such as the Olympus 593[176,178]. Aircraft of this type cruise at high altitude, typically 17-18 km[176] (Fig 55), where pollution effects, particularly on the ozone layer, are more pronounced. The relevant emission levels[178] are given in Table 26, where aircraft utilisation is assumed to be about 5.5 hours per day (at high altitude); values for wide-bodied subsonic aircraft have been added for comparison, with a utilisation of 8 hours per day[178].

It will be seen that the emission levels for supersonic aircraft, per hour of operation, are greater, mainly owing to their greater fuel flow, but this is offset to some extent by their relatively high productivity. However, the subsonic fleet vastly outnumbers any supersonic fleet that has ever been postulated, so the bulk of the contributions to the atmosphere come from conventional subsonic aircraft; this is reflected in the choice of relative numbers in Table 26, 100 supersonic and 1000 subsonic.

Table 27 compares the aircraft values referred to above with the total quantity of each component present in the atmosphere, a number of typical sources of each component, and the contributions that would be made by the launch of sufficient HLLVs to construct one 10 GW SPS per year. The relative concentrations of the different components are taken from Ref 179, and it is assumed that the total mass of the atmosphere is 5.27×10^{18} kg, or 5.27×10^{9} Mt[180]. The NASA baseline SPS data[33] are used to give the number of HLLV launches required to construct the SPS, assuming that sections are completed in low earth orbit, then transported to geostationary orbit in the self-powered mode, using electric thrusters. A total of 391 flights, each carrying 424 tonnes, will be needed, plus 36 flights of a smaller personnel transport vehicle. Although the NASA baseline concept envisages that first stage propellants will be CH_4/LO_2, Table 27 assumes the use of kerosene, a worst-case situation because of the naturally occurring impurities. These impurities are assumed to be in the same concentrations in the fuel as in aviation kerosene. The propellant loads are detailed in Table 28[33].

Before proceeding to consider individual components, certain features of Table 27 are worthy of comment. In particular, it will be noted that in every case the HLLV emissions are far less than those predicted for 100 SSTs, or actually measured for 1000 Boeing 747s. There is, consequently, very little reason for fearing that the launches associated with the construction of an SPS system will harm the environment any more than existing human activities. In fact, in all the cases for which documentation exists, the annual imputs from SPS activities will be many orders of magnitude below those from natural processes, such as the decay of vegetation, or from industrial activities, notably the combustion of fossil fuels and the use of fertilisers.

The value for NO_x in the table, 0.014 Mt per year, was derived on the basis of the emissions from turbojet engines[178], where the oxygen used in combustion passes through the hot zone of the engine accompanied by large quantities of nitrogen. This is not the case in rocket motors, the only place where the production of NO_x can occur being in the region where the hot exhaust plume interacts and mixes with the atmosphere. So, although temperatures will be higher than in the turbojet, the overall production should be much lower than the above value. However, to this must be added the amount produced by shockwaves and aerodynamic heating during re-entry of the HLLV.

In the present study, the re-entry contribution to NO_x was calculated by assuming that 1 to 2×10^{16} molecules are produced per Joule of available energy[187]. In the case of the orbiter, this energy was assessed as the sum of its kinetic and potential energy in an orbit of 500 km altitude, with intermediate values of velocity and altitude being taken for the booster stage. It was found that the mass of NO_x formed was between 0.5 and 1.0×10^{-2} Mt per year. However, this represents an upper limit[87], so the amount to be added to that given in Table 27 is much smaller than this, in all probability.

034

Table 26 - Aircraft emission levels, for supersonic and subsonic types

Combustion product	Rate of production (g/kg of fuel)	Supersonic transport** (*eg* Concorde) Production rate (kg) Per hour (1 a/c)	Per year (1 a/c)	Per year (100 a/c)	Wide-body subsonic aircraft** (*eg* Boeing 747) Production rate (kg) Per hour (1 a/c)	Per year (1 a/c)	Per year (1000 a/c)
CO_2	3140	6.28×10^4	1.26×10^8	1.26×10^{10}	3.14×10^4	9.17×10^7	9.17×10^{10}
H_2O	1270	2.54×10^4	5.09×10^7	5.09×10^9	1.27×10^4	3.71×10^7	3.71×10^{10}
NO_x	18-20*	400	8.04×10^5	8.04×10^7	180	5.26×10^5	5.26×10^8
CO	3.5	70	1.4×10^5	1.4×10^7	35	1.02×10^5	1.02×10^8
SO_2	1-2.4	20-48	$4\text{-}9.6 \times 10^4$	$4\text{-}9.6 \times 10^6$	10-24	$2.9\text{-}7 \times 10^4$	$2.9\text{-}7 \times 10^7$
Unburnt fuel	0.2	4	8×10^3	8×10^5	2	5.8×10^3	5.8×10^6
C (particles)	0.1	2	4×10^4	4×10^5	1	2.9×10^3	2.9×10^6

* 18 for subsonic, 20 for supersonic.

** Fuel flow 20000 kg/h for supersonic, 10000 kg/h for subsonic[178].

Table 28 - Propellant loads required for construction of 10 GW SPS in 1 year

Vehicle type	Stage	Number per SPS	Propellant loads in tonnes LO_2 Flight	Annual	LH_2 Flight	Annual	Hydrocarbon Flight	Annual
PLV	1	36	1222	44×10^3			347	12.5×10^3
PLV	2	36	472	17×10^3	79	2.85×10^3		
HLLV	1	391	5115	2.0×10^6			1714	0.67×10^6
HLLV	2	391	2077	0.812×10^6	340	0.133×10^6		
Annual totals (Mt)				2.873		0.136		0.683

Table 27

Comparison of masses of HLLV exhaust products with atmospheric abundances and other sources

Component	Abundance (Mt)	Residence time	Value of typical injection rates (Mt/year)					
			Amount	Source	Ref	100 SSTs	1000 747s	10 GW SPS
CO_2 (Ref 181)	2.4×10^6	5 years	1.83×10^4	Fossil fuels	179	12.6	91.7	2.1
			2.09×10^5	Respiration	179			
			1.00×10^4	Human activity	92			
H_2O*	4.6×10^7	1 week	$\sim 2.4 \times 10^9$	Vaporization by sun	††	5.1	37.1	1.84
			1.5×10^2	Oxidation of CH_4	178			
N_2O	2.6×10^3	4-70 years	11-540	Bacteria	179			
NH_2	3.1	1 week	47	Decomposition	179			
NO	0.5	11-20 months (Ref 87)	$(1-5) \times 10^{-3}$	1 Mt nuclear explosion	182			
			0.8	$O(^1D) + N_2O \rightarrow NO + NO$	178			
			0.2-2.0	All natural sources	70			
			0.73	All nuclear explosions in 1962 (214 Mt)	183			
NO_2	0.84	11-20 months	10-40**	Combustion, lightning	179			
NO_x	,	11-20 months	35-90‡	Lightning	184	0.08	0.5	<<0.014
			20-30‡	Anthropogenic activities	184			
CO	6.1×10^2	16 weeks	$\sim 2 \times 10^3$	All sources	††	0.01	0.1	0.0024
SO_2	2.33	Hours	4	Volcanic activity	179	$(4-10) \times 10^{-3}$	$(3-7) \times 10^{-2}$	$(0.68-1.64) \times 10^{-3}$
			130	Industrial pollution	179			
			116	Decomposition	179			
			50	European industry	185			
CH_4	4.4×10^3	4 years	800	Decomposition	179			
			200	Natural gas wells	179			
H_2	1.8×10^2	10 years	18	Fermentation in soil; photodissociation of formaldehyde	††			
Unburnt fuel						8×10^{-4}	6×10^{-3}	1.4×10^{-4}
Freon 11	2.47	50 years	0.05	Human activity	††			
" 12	4.40	100 years	0.04	" "	"			0.14†
" 21	0.26	2 years	0.13	" "	"			
CCl_4	2.80	60 years	0.05	" "	"			
CH_3Cl	6.42	1.4 years	4.6 10	Marine organisms Slash/burn agriculture, forest fires	" 186			
HCl	6.64	1 week	345	Sea	††			
Carbon particles						4×10^{-4}	3×10^{-3}	6.8×10^{-5}

* But see Table 29.

** Includes <2 Mt/year of NO.

† Assuming 0.01% impurity in propellants.

†† Calculated from abundance and residence time.

‡ Mass of nitrogen only given.

The value derived for the chlorine compounds assumed a 0.01% impurity in all propellants. The resulting emission rate is far less than that occurring naturally, but it is of the order of that for Freon 21 and is above those for the other Freons and carbon tetrachloride. Thus, although the 0.01% value is purely arbitrary, and the chemical nature of the likely emission components is unknown, this result indicates the need for research into the chemistry of halogens present as impurities in rocket propellants. If they are found to emerge as the relatively short-lived naturally produced compounds, there will be no problem, but if long-lived more harmful compounds appear, care must be taken to minimise impurity levels.

Values for methane and hydrogen were included to show that, should these propellants be emitted in an unburnt state, they will not contribute appreciably to naturally occurring fluxes.

6.3.1 Carbon dioxide

As can be seen from Table 27, carbon dioxide is produced in vast quantities by various forms of respiration, but, for many years human contributions to this flux, through burning fossil fuels, have been increasing at a worrying rate[179]. This concern is due to the fact that CO_2 is climatologically active, in that it absorbs in the thermal infrared region, as does methane, and contributes significantly towards the 'greenhouse' effect. In essence, an increase of CO_2 concentration in the atmosphere means that infrared radiation can escape to space from the earth's surface less easily, and the surface becomes warmer. The available models are not accurate enough to predict the effect with any precision, results of between 0.7°C and 10°C for a doubling of the present CO_2 concentration of 330 ppmv having been reported[92], with a probable value of 2°C. Such predictions[179] are presented in Fig 59 for two possible fossil fuel burning scenarios.

Since the late 19th century, the CO_2 concentration has increased from 290-330 ppmv, although this has been due to a number of different sources. In the 100 years before 1950, it has been estimated that 6×10^4 Mt of carbon was emitted into the atmosphere through burning fossil fuels, and 1.2×10^5 Mt through deforestation and burning dead organic material[92]. Only about 50% has contributed to the measured rise of CO_2 concentration, so a large sink must be available, probably the oceans, which contain 5.8×10^5 Mt of carbon in surface layers, and 3.8×10^7 Mt in deep water[179]. The biomass reservoir of excess carbon appears to be shrinking at a rapid rate, as deforestation continues, and it is not certain how much more carbon the oceans can absorb, so extreme care will be needed in future before adding more CO_2 to the atmosphere. However, the SPS will contribute

034

very little and, if it eventually displaces fossil fuel sources of energy, it will actually assist in reducing CO_2 levels.

The difficulty experienced in predicting these effects[188] can be gauged by examining the schematic summary of carbon sources, sinks and reservoirs in Fig 60. As a further example, the sensitivity of some of the parameters to minor changes is indicated by the fact that a 0.2% change in the size of the land biosphere will alter the carbon flux into the atmosphere by more than 1000 Mt per year[179]. Moreover, it is difficult to include the many complex feed-back mechanisms that exist into theoretical models.

In considering the role of HLLV emissions, it must be remembered that these occur throughout the whole vertical height of the atmosphere. However, the 3-30 years residence time of CO_2 ensures that exchange between the stratosphere and troposhere is at least as rapid as exchange with the earth's surface, and no relative build-up in the stratosphere is predicted[178]. In addition, its production from methane oxidation at high altitude is small, so any contribution of the HLLV to methane concentrations should have little effect. It should perhaps be mentioned that an increase of CO_2 at high altitude has one other effect; it increases the cooling of the atmosphere, because it emits more infrared radiation than it absorbs, so speeding up the ozone-forming reaction

$$O + O_2 + M \rightarrow O_3 + M \quad .$$

At the same time, ozone-destroying reactions slow down, causing a net increase in ozone concentration[93,189]. It has been predicted, on the basis of a one-dimensional theory[189], that a doubling of CO_2 concentration will lead to an increase in the total ozone column density of 1-5%. More comprehensive, two-dimensional analyses[93] have allowed the increases to be evaluated as functions of time, altitude and latitude. A resulting latitude-time section of the percentage increase in total ozone is shown in Fig 61, which confirms that there is an increase everywhere; the global average for this increase is about 7%, for a doubling of the CO_2 content of the atmosphere.

It is clear that there is good reason for concern about the predicted CO_2 increases, mainly because of adverse effects of temperature increases on agriculture and fishing[190, 191]. There will also be secondary effects, such as expansion of the oceans, giving a sea level rise of 1 metre for a 5°C temperature rise. So recently authorised studies[192] are welcome, and proponents of new fuel-burning systems should be required to demonstrate that their technology does not

034

add significantly to the problem. This is an excellent reason for choosing LH_2/LO_2 motors for all stages of the SPS transportation system.

6.3.2 Water vapour

With the huge production of water vapour from the oceans, it is surprising that the emission of any quantity by an SST or an HLLV is of the slightest concern. However, the lower stratosphere is very cold, typically at 190 K, and is therefore dry, so any contribution to its water vapour content from another source must be carefully investigated. Although the primary effects of water in the troposphere are to provide rainfall, energy transport via latent heat of condensation, and a major contribution to the radiation balance via clouds and the thermal blanketing properties of its infrared absorption and emission[179], it is an essential precursor to the OH radical, via

$$O(^1D) + H_2O \rightarrow 2OH \qquad (1)$$

and it is this radical that is of particular interest in the stratosphere. The $O(^1D)$ excited atoms participating in this reaction appear as a result of the photolysis of ozone at wavelengths below 310 nm[90].

This radical can produce the following reaction[176]:

$$OH + O_3 \rightarrow HO_2 + O_2$$

$$HO_2 + O_3 \rightarrow OH + 2O_2 \quad . \qquad (2)$$

Thus OH is catalytically converting O_3 into O_2; this occurs predominantly in the lower stratosphere. At higher altitudes,

$$OH + O \rightarrow H + O_2$$

$$H + O_3 \rightarrow OH + O_2$$

again destroying ozone. The HO_2 radicals participating in equation (2) are formed by the rapid interconversion between OH and HO_2 in sunlight, and in the course of methane oxidation.

A further important effect involves a reaction with NO, for which a recently revised reaction rate[175] has lead to an important reassessment of the role of

034

AD-A089 526 ROYAL AIRCRAFT ESTABLISHMENT FARNBOROUGH (ENGLAND) F/G 21/3
SOLAR POWER SATELLITES - A REVIEW OF THE SPACE TRANSPORTATION O--ETC(U)
MAR 80 D G FEARN
UNCLASSIFIED RAE-TR-80034 DRIC-BR-74953 NL

2 OF 3
AD
A089526

combustion products in the chemistry of the stratosphere. This reaction is

$$NO + HO_2 \rightarrow NO_2 + OH \qquad (3)$$

and, when combined with recent direct measurements of the reaction rate of equation (2)[193], leads to the conclusion that the nitrogen oxides emitted by supersonic aircraft increase ozone concentration, rather than reduce it. Thus the small quantity of such oxides produced by an HLLV would be expected to behave in a similar fashion. Fig 62 shows that predicted and measured ozone concentrations are now in excellent agreement.

Water vapour also influences the chemistry of halogen compounds in the stratosphere, through the action of OH on, for instance, stable HCl gas[176];

$$OH + HCl \rightarrow H_2O + Cl \qquad (4)$$

$$O_3 + Cl \rightarrow O_2 + ClO$$

$$O + ClO \rightarrow O_2 + Cl\ .$$

Thus the free Cl, which is formed by the action of the OH radical, catalyses the destruction of ozone.

It is evident that water vapour plays an important and complex role in the chemistry of the upper atmosphere, although it is far from completely understood. To determine the importance of an HLLV to these processes, the natural flux into and out of the stratosphere must be known, together with the rate of injection from rocket motors. Some information, applicable to the Space Shuttle, is available in Ref 70; it is reproduced in Table 29.

It appears that the Shuttle will inject, under these circumstances, perhaps 2% per year of the water vapour already present in the 40-50 km layer, and this would require serious consideration; an HLLV, with roughly the same number of launches, would obviously cause a greater perturbation, perhaps by an order of magnitude. Nevertheless, the natural fluxes are immense, the rising branch of the Hadley cell contributing an imput of perhaps 600 Mt per year at low latitudes, the vaporisation of thunderstorm cloud tops 800 Mt per year, and the oxidation of methane perhaps 150 Mt per year[178]. The total is of the order of 1500 Mt per year. Thus the contribution of the second stages of nearly 400 HLLVs per year, 0.97 Mt,

034

Table 29

Injection of water vapour into the stratosphere from 360 Space Shuttle launches per year

Altitude (km)	Residence time (year)	Atmosphere mass (10^6 Mt)	Natural H_2O content (Mt)	Water injected per launch (tonnes)	Added H_2O at equilibrium (Mt)	Per cent increase
10-20	0.1-1	1000	2000	35	0.0013-0.013	$6-60 \times 10^{-5}$
20-30	2-4	200	400	27	0.019-0.039	$5-10 \times 10^{-3}$
30-40	2-10	50	250	20	0.014-0.072	$6-30 \times 10^{-3}$
40-50	4-20	1	5	15	0.022-0.11	0.4-2

is, apparently, insignificant, although local effects around the launch site might be observable.

6.3.3 Nitrogen oxides

The role of various oxides of nitrogen has already been referred to in connection with water vapour, and it has also been mentioned that recent experimental data, when combined with improved theoretical models, clearly indicate that these compounds will not have the disastrous effect on the ozone layer that was postulated earlier[176,193]. In fact, a detailed study of the impact of a fleet of SSTs[176] has concluded that these aircraft should cause an increase in ozone layer concentration. This change has largely resulted from improved knowledge of reaction rates.

Nitrous oxide, N_2O, is the most abundant nitrogen compound by several orders of magnitude (Table 27). It is produced mainly by denitrifying bacteria, and its most important chemical role is as a source of nitric oxide, which catalytically reduces the ambient ozone, via the reactions[182]

$$O(^1D) + N_2O \rightarrow NO + NO$$

$$NO + O_3 \rightarrow O_2 + NO_2$$

$$NO_2 + O \rightarrow NO + O_2$$

or

$$NO_2 + \text{photon} \rightarrow NO + O \ .$$

It is clear from the above equations that the other oxides, NO_x, have a direct influence on ozone loss rates, so that their emission from an HLLV must be carefully considered. The concern over these emissions, which has been forcibly expressed in recent years, resulted from a realisation of the implications of these catalytic reactions.

However, there were early indications that other mechanisms must be playing an important regulatory part in the chemistry of ozone formation and destruction. This evidence came from nuclear weapons testing, which produced very large quantities of NO_x, which penetrated into the stratosphere[183]. The peak amount was formed in 1962, when 214 Mt of explosions yielded 0.73 Mt of NO_x, with 0.41 Mt being injected into the atmosphere the preceding year[183]. The expected zone reduction of about 5% (Fig 63) was not observed. Similar indications of compensating mechanisms were evident when more recent observations of ozone concentrations, following French and Chinese nuclear tests, failed to detect the predicted decrease[194].

034

This evidence suggests that the NO_x compounds are removed from the stratosphere before they can cause appreciable harm, or that the bulk of the NO_x is stabilised at altitudes below which it increases rather than reduces the stratospheric ozone. In fact, the natural removal rate of nitrogen oxides has been estimated[184] to be the equivalent of about 90 Mt per year of nitrogen, which is perhaps four orders of magnitude greater than the injection rate from HLLVs. One important removal mechanism has already been referred to, and has been presented as equation (3). The reaction rate for this conversion of NO into NO_2 is 30 times larger than the early estimates, causing calculated concentrations of both HO_2 and NO to be revised downwards drastically, with OH concentrations being much increased. The latter leads to a more complete conversion of NO_2 into nitric acid, via

$$NO_2 + OH + M \rightarrow HNO_3 + M .$$

As this acid is relatively stable, its chemical loss mechanisms being rather inefficient[176], it is stored in the stratosphere until it is removed in mildly acidic rain. Ozone destruction is therefore dramatically reduced.

It is also worth comparing the stratospheric injection rates of NO_x due to HLLV operations with natural sources, to establish whether the former are of real significance. Natural fluxes into the stratosphere[178] include the oxidation of single nitrogen atoms formed from N_2 by cosmic radiation and energetic solar wind particles, and the oxidation of ammonia by OH radicals. There is also a strong possibility that the troposphere supplies a significant amount, via the upward branch of the Hadley cell and cumulus clouds in the tropics, assuming that the latter penetrate the tropopause. These sources greatly exceed those expected to be produced by HLLV flights[178], with 0.52 Mt per year being one estimate for the Hadley cell contribution alone.

It should also be mentioned that N_2O has an absorption band at 7.78 μm and contributes significantly towards the greenhouse effect. It has been estimated that doubling its concentration would raise the global mean surface temperature by about 0.7°C[179].

6.3.4 Ozone

In considering the influence of aircraft or HLLV emissions on the atmosphere, the primary interest is in any effect on the ozone layer. This layer absorbs the bulk of the ultraviolet radiation incident on the earth; if the ozone was not present, the ultraviolet level at the earth's surface would reach values comparable with those of germicidal sterilisation lamps. The result would be the most severe for aquatic micro-organisms, with land plants, in general, showing a pronounced reduction of growth. For humans, there would be an increase in sunburn, skin cancer, and snow blindness[182]. The ultraviolet radiation flux is shown in Fig 64 for 90% and 94% depletion of the ozone layer; such levels have been predicted to result from nuclear wars[182] or from nearby supernovae events[195].

As has already been mentioned, there was in the recent past a great deal of concern about possible destruction of the ozone layer by emissions from supersonic aircraft flying at high altitude. This has now been dispelled[175,176] by revisions of a number of important reaction rates, which have since been measured with reasonable accuracy. As indicated in Fig 58, which was derived[175] for a fleet of 200 SSTs flying at 20 km altitude, it is now predicted that exhaust emissions will substantially increase ozone concentrations below about 25 km. Above that altitude, a much smaller decrease is predicted. Consequently, as the predicted emissions from HLLV sources would be far less, as shown in Table 27, there can now be little doubt that the construction of an SPS system is acceptable from this point of view. Even if the net result were to be a marginal increase of ozone concentration, it would be so small as to be non-detectable against natural background variations. The latter, for example, include a seasonal variation of 40% in mid-latitudes[87] and a considerable increase from equator to pole in the total column density[196].

Although the oxidation of methane and other hydrocarbons may produce appreciable quantities of ozone in the stratosphere, two major contributions are the following reactions with carbon monoxide[196] and NO_2[176]:

$$CO + OH \rightarrow CO_2 + H$$

$$H + O_2 + M \rightarrow HO_2 + M$$

$$HO_2 + NO \rightarrow NO_2 + OH$$

$$NO_2 + h\nu \rightarrow NO + O$$

$$O + O_2 + M \rightarrow O_3 + M \ .$$

The net reaction is

034 $$CO + 2O_2 \rightarrow CO_2 + O_3 \ .$$

Lower in the atmosphere, it has been traditional to assume that ozone diffuses from above, where it has been created by the photodissociation of O_2. An alternative view[179] is that a reaction involving methane is responsible for the appearance of much of the ozone in the troposphere. This reaction chain has 15 separate steps, giving the net result:

$$CH_4 + 3O_2 \rightarrow H_2O + CO_2 + H_2 + O_3 .$$

Losses of ozone are important because of the protection this layer offers to the biosphere, and because almost all tropospheric photochemistry is initiated by the photolysis of ozone in the 300-310 nm wavelength region, *ie*

$$O_3 + h\nu \rightarrow O_2 + O(^1D) .$$

The $O(^1D)$ then reacts with water vapour to give OH, or with NO_2 to give NO and O. Several loss mechanisms have been referred to above. They include the catalytic conversion of O_3 to O_2 by OH radicals (equation (2)), and via the route involving NO and HO_2 (equation (3)). A further process involves the halogen compounds, from which active atoms or compounds, principally chlorine, can be liberated via equation (4). It is an extremely complex situation, which requires much more study.

6.3.5 Sulphur dioxide and carbon particles

Although SO_2 is an extremely important industrial pollutant, as indicated by the data in Table 27, there is no evidence that HLLV operations will contribute significantly to this. The gas is toxic to plants and animals and is oxidised in the atmosphere, with a lifetime of hours, to form sulphuric acid. Intermediate steps in this process involve reactions with OH and HO_2 radicals to form SO_3[179]. Although H_2SO_4 may have an influence on cloud formation, it is not clear whether it is of global climatic significance.

In the stratosphere it is possible that aerosols, principally of H_2SO_4, may influence the radiation balance[178]. The world-wide aerosol distribution is dominated by the Junge layer, which is a few kilometres thick and is centred 5-8 km above the tropopause. Its main constituents are sulphate particles in the 0.1 to 1.0 μm radius range, produced by the reaction of H_2SO_4 and NH_3. The main source is terrestrial, with massive variations due to volcanic activity; over the past 15 years, the total mass has varied by a factor 100.

034

The global average aerosol mass has been estimated to be[178] 2.5 Mt, with a source strength of at least 1.3 Mt per year, not counting the huge transient inputs from volcanic eruptions. The amount expected from HLLV flights is so small in comparison that it can be neglected. The same conclusion was reached concerning emissions from up to 1000 SSTs, it being estimated that they would have only 15% of the effect of the 1963 Agung eruption.

The unburnt carbon particles that might be emitted from rocket engines can be considered in a similar way. It has been found that their influence on the radiative balance of the stratosphere is below that of SO_2, so they may be neglected in this context. Other particles produced from unburnt hydrocarbon emissions can also be ignored for the same reason.

6.3.6 Carbon monoxide

Carbon monoxide is of importance mainly due to its involvement in the production of ozone, as detailed in section 6.3.4. It is produced naturally by the oxidation of methane[179], and a very significant contribution arises from the combustion of fossil fuels; this causes the level in the Northern Hemisphere to exceed that in the Southern by a factor 4. The fluxes already present are such that HLLV operations will not cause an appreciable change to atmospheric levels.

6.3.7 Methane

This gas is produced in vast quantities from natural sources, and it is present fairly uniformly in the troposphere at a concentration of about 1.4 ppmv. This value decreases in the stratosphere above 30 km, due to reactions with OH and O. The major loss is due to the reaction[179]

$$CH_4 + OH \rightarrow CH_3 + H_2O \quad . \qquad (5)$$

However, it has been predicted that this may be less effective in the future, because the density of OH in the atmosphere may decrease as a result of an increase of CO concentration, CO acting as an effective scavenger of OH (section 6.3.4). This CH_4 concentration may well increase, leading to a slight rise in global mean temperature; an additional 0.3 to 0.4 K might result from doubling the methane density. In any case, the effect of an HLLV on such a perturbation can be ignored, in view of the very low emission to be expected, in comparison with natural sources.

It has already been mentioned that methane may be the starting point for the production of ozone at lower altitudes. It is also the starting point of many

034

other reactions, via equation (5), which finally produce, amongst other compounds, HO_2, CO, CH_3O_2, CH_3O and NO_2. It is therefore of considerable importance in fully understanding the chemical processes taking place, and illustrates how closely the carbon, nitrogen and hydrogen cycles are inter-related.

6.4 Effects on the upper atmosphere

Although the bulk of the exhaust gases will be deposited in the troposphere, prior to separation of the first stage vehicle, and a lesser amount will be injected into the stratosphere (Fig 55), the second stage engines will continue to operate as the HLLV climbs into the ionosphere, perhaps cutting out at about 100 km altitude. The vehicle will then be in an elliptical orbit, which must be circularised by another thrusting period at the chosen LEO altitude, which will be several 100 km. Thus pollutants will be injected into the ionosphere below 100 km (the D and E regions) by the initial climb and into the F-2 region and above by the circularisation burn.

The most striking effect of these processes is likely to be a severe depletion of the total electron content of the F layers of the ionosphere. Such a depletion was observed[197] when Skylab II was launched in 1973 by a Saturn V rocket. The depletion was by 50%, it lasted for 4 hours, and it covered an area of 2000 km diameter. The reason for the effect was the rapid loss of O^+ due to the following reactions,

$$O^+ + H_2 \rightarrow OH^+ + H$$

$$O^+ + H_2O \rightarrow H_2O^+ + O$$

where H_2 and H_2O were the principal exhaust constituents. These reactions were rapidly followed by recombination reactions, removing electrons from the ionosphere:

$$OH^+ + e^- \rightarrow O + H$$

$$H_2O^+ + e^- \rightarrow H_2 + O$$

$$H_2O^+ + e^- \rightarrow OH + H \; .$$

More recently, similar electron depletions have been produced deliberately by means of rocket-borne explosives[198], producing large quantities of H_2O, CO_2 and N_2. Predicted airglows were also observed.

Preliminary calculations[198] suggest that the repetitive launch of many HLLVs will cause a substantial and continuous depletion of electron number density. Possible results that must be examined include alterations of particle-wave interactions, conductivity, drag forces on satellites, response of the ionospheric-magnetospheric system to magnetic storms, location and behaviour of the auroral region of the ionosphere, airglow intensity, electron temperature profile, and electromagnetic wave propagation properties.

Any influence on the stratosphere or troposphere would either result from a direct migration of effluents, or through triggering or coupling mechanisms. There is, at the present time, considerable interest in such cause and effect relationships between the upper and lower atmosphere, due to the possible influence of the upper atmosphere on weather patterns. It is now recognised that it is perhaps possible for comparatively minor events, such as changes in the intensity of the solar wind, to influence the weather in the troposphere via poorly understood coupling mechanisms involving magnetospheric processes. One possible mechanism depends upon intense fluxes of particles being injected into the auroral zone during geomagnetically active periods[199]. These fluxes may result in the formation of ions in the upper atmosphere, which would serve as nuclei for water vapour condensation and thus for cloud formation. These clouds would then modify the radiation balance of the atmosphere.

Considerably less well understood are the effects that rocket effluents might have on the D and E regions of the ionosphere. These regions are more difficult to treat analytically, because of the increased importance of particle collisions and of neutral particle chemistry.

It is evident from the above discussion that much more work is required to determine whether HLLV operation will have any adverse influence on the climate, via processes occurring above the stratosphere. However, the magnitudes of the natural sources and sinks, and the variability of natural phenomena, are such that any appreciable modification to weather patterns must be regarded as extremely unlikely. Nevertheless, it would be prudent to check that this is indeed the case.

6.5 Summarising remarks

It has recently been shown, from a detailed consideration of atmospheric chemistry, using newly-measured reaction rates, that the previously-feared adverse influences of SST aircraft on the environment were not well-founded. In particular, the ozone column density is now calculated to be attenuated only by

NO_x from operations above about 20 km altitude, with small increases resulting from flights below this.

These conclusions can be transferred directly to the HLLV launching activity needed to construct an SPS, because the level of all emissions will be much less than that from a fleet of SSTs. This outcome is reinforced by a detailed look at the chemistry influenced by the different effluents, and by comparing their magnitudes with the fluxes occurring naturally, or as a result of other human activities.

The only reservations concern halogen compounds. If these are present in appreciable quantities in any of the propellants, their ultimate destinations must be carefully studied. It must be shown that they do not form long-lived species that might adversely influence the ozone layer. If there is any possibility of this, the propellants in question must be obtained with higher purity. However, even the concern over these compounds has been alleviated by indications of the existence of large natural sinks.

7 CONCLUSIONS

The individual conclusions reached in the various sections of this Report have usually been tentative, because they have been based on predictions of the future status of the technology in question and, in some cases, very uncertain requirements. Nevertheless, they are worth summarising here to give an indication of the direction in which future developments are most likely to proceed.

(i) HLLV. This should be a vertical take-off, vertical landing, two-stage, ballistic vehicle, with a payload of about 400 tonnes. Both stages will land, with the assistance of retro-rockets, at the launch site, to minimise turn-around time. The gross lift-off mass will be about 10500 tonnes, about 9000 tonnes of which will be propellant. The whole vehicle will be re-usable, including the payload shroud.

(ii) HLLV propulsion. To minimise atmospheric pollution, it would be preferable to employ LH_2/LO_2 engines for both stages. If unavoidable, a hydrocarbon, such as kerosene or methane, may be substituted for the LH_2 in the first-stage, but production of such fuels may eventually pose significant problems. Under no circumstances can solid propellant boosters be used, and air-augmented rocket or ramjet systems will probably produce unacceptable quantities of nitrogen oxides. Whatever the choice, existing technology can be utilised; the Space Shuttle engines for the LH_2/LO_2 option and the Saturn V engines for kerosene and other hydrocarbons.

(iii) Atmospheric pollution. Pollution problems are minimised by using LH_2/LO_2 combustion. Hydrocarbons are almost as suitable from this point of view, provided that impurity levels are kept to an extremely low level. The influx of CO_2 and H_2O into the dry stratosphere needs to be examined carefully, owing to a possible influence on the ozone layer. However, the major concern is the nitrogen oxides produced both by the rocket exhausts and the shockwaves generated by the motion of the vehicle through the atmosphere. Halogen impurities may also be of significance.

(iv) Launch safety. The mass of propellants contained by the HLLV and the kinetic energy that the vehicle gains during a launch are both very large, and suggest that the results of a serious accident would be catastrophic, perhaps equivalent to the explosion of around 10K tonnes of TNT. Consequently, the launch site and the early trajectory of the HLLV must be far removed from centres of population, suggesting the use of a coastal site or an isolated ocean island.

(v) Launch noise. Rough estimates of the noise emitted by an HLLV during lift-off suggest that it will be totally unacceptable over a huge area surrounding the launch site, perhaps extending as far as 100 km. This is, therefore, another reason for locating the launch site on an island or a deserted coast. The sonic booms to be expected during re-entry will be very severe, providing further justification for the selection of an isolated launch site.

(vi) Choice of launch site. Safety and noise criteria dictate that an isolated site be chosen, perhaps a Pacific island. An equatorial location is most desirable to eliminate a costly inclination change subsequent to launch. With an island or coastal site, ease of access is assured and copious supplies of water are available for cooling and for manufacturing propellants.

(vii) HLLV costs. From the many published analyses, it can be concluded that an HLLV, employing only minor extrapolations of present day technology, will cost about $8B to develop for a payload of 400 tonnes, with a possible error of perhaps ±30%. Taking the most recent figures, the unit cost of production may be around $1B, and the cost of launching payloads to low orbit $20 ± 5 per kg. Propellants will amount to about 25% of launch costs.

(viii) Personnel transport to low orbit. A unanimous view exists that this should be accomplished using a fully re-usable development of the present Space Shuttle, with a payload capability of up to 74 tonnes or about 75 passengers. The cost per flight is estimated to be about $12M.

(ix) Personnel transport to geostationary orbit. As a short transfer is necessary, of about 10 hours, chemical propulsion is mandatory, and LH_2/LO_2 engines are preferable for maximum performance. A two-stage vehicle with a payload of 75 to 100 passengers plus an appreciable amount of cargo will probably be developed, using Space Shuttle technology. About 2 kg of propellant per kg of payload will be needed, and the cost will be about $10M per mission.

(x) Cargo transport to geostationary orbit. By using electric propulsion, the propellant required can be reduced from about 2 kg per kg of payload to, initially, 0.25 kg and, ultimately, perhaps to 0.05 kg. So, although the electric propulsion option is much more complex and expensive to develop and procure than the chemical alternative, it is by far the most economic choice; its use has been estimated to save $1.2B per 5 GW SPS and $3B per 10 GW SPS. Such electric propulsion systems would be powered by solar cells, at least in the earlier applications; nuclear power sources could follow, if safety problems can be resolved.

(xi) Choice of electric propulsion system. Owing to its highly developed state, with proven performance and lifetime, the Kaufman ion thruster is selected. Modification to employ argon propellant is already underway, with NASA sponsorship, and scaling to diameter in the 60-120 cm range should not present great difficulty. Specific impulses will initially be in the range 10000-15000 seconds, with 25000 seconds available later. The MPD arc thruster may ultimately become a serious competitor to the Kaufman device, but its present performance and state of development are both so low that it cannot be considered now, if technical feasibility is to be maintained.

(xii) Orbit transfer strategies. Two basic strategies, using electric propulsion, exist. One is to develop an autonomous cargo carrying vehicle, powered by its own solar arrays, which would ferry materials and equipment to geostationary orbit where most of the construction of an SPS would take place. The other, which is preferred at present, is to construct sections of the SPS in low orbit, attach to them ion thruster propulsion modules, then use a part of a section's own solar array to power the thrusters during orbit transfer. Final assembly would then take place in geostationary orbit. Both methods assume that radiation damage to the solar cells can be repaired by annealing. The cost difference between them appears to be small, so that secondary considerations may enter into making a final decision.

(xiii) Orbit transfer costs. These are very difficult to estimate, published figures ranging from $15 to $200 per kg of payload. Possibly $50 per kg is the best compromise to quote at the time of writing. What is more certain, and equally important, is that the use of electric propulsion will approximately halve the number of HLLV launches required to construct an SPS. This will be beneficial in a number of important ways.

Finally, it may be stated that this in-depth review of the possible problems of space transportation, in the context of the development and deployment of solar power satellite systems, has not revealed any insurmountable technical or environmental difficulties which might cause the SPS concept to be abandoned. Only a relatively small extrapolation of present-day technology appears to be needed to allow individual payloads of 100s of tonnes to be successfully launched into low earth orbit, and for an equivalent personnel transport vehicle to be developed. Similarly, existing electric propulsion technology is almost adequate to perform the transfer manoevure to geostationary orbit. The major remaining doubt concerns cost, both for development and for operations; this factor could determine the fate of the SPS concept, owing to its impact on the economic viability of deploying such spacecraft. Cost estimates so far produced by workers in the USA indicate that electricity generated by means of an SPS system should be economically competitive, even including all transportation charges, but much more study will be necessary to confirm this conclusion.

Acknowledgments

This review was carried out as part of a more comprehensive analysis of the technical, economic and political feasibility of solar power satellites, which was funded by the Department of Industry. This study was led by General Technology Systems Ltd, and the present author would like to acknowledge the assistance and cooperation freely given by the staff of that Company, in particular by Messrs P. Brunt, S.R. Dauncey, S.L. Entres and L.P. White.

Considerable assistance was also given to the author, in lengthy and very productive discussions, by Mr A. Bond and Dr A.R. Martin of the UKAEA Culham Laboratory, Dr D. Kassing of ESTEC, Mr E.H. Cooke-Yarborough of AERE Harwell, and Dr A.F. Tuck of the Meteorological Office. Thanks are also due to Dr T.A. Holbeche of Aerodynamics Department, RAE, for very useful advice concerning acoustic noise, and to Mr H.F. Worsnop of Space Department for data regarding the Space Shuttle.

REFERENCES

No.	Author	Title, etc
1	P.E. Glaser	The potential of satellite solar power. *Proc. IEEE*, 65, 8, 1162-1176, August 1977
2	M.E. Alper	Photovoltaics and solar thermal power systems: status and prospects. Proc. Royal Aero. Soc./AIAA Conf. on Energy and Aerospace, London, December 1978
3	K. Bogus M. Trumper	Specification of requirements for SLM solar arrays. ESA Spec. TEC/KB/MT/sm/2056, June 1978
4	J. Kistemaker	Solar energy from space. *Phys. Bull.*, 29, 2, 58, February 1978
5	R.H. Merson	Satellite orbit and attitude theory and its use with Skynet 2. RAE Technical Report 77083 (1977)
6	P.E. Glaser	Power from the sun: its future. *Science*, 162, 857-886, November 1968
7	Anon	Solar power satellite. System definition study. Part I and Part II. Volume 1. Executive Summary. Boeing Report D180-22876-1, December 1977
8	W.C. Lindsey	A solar power satellite transmission system incorporating automatic beamforming, steering and phase control. Lincom Corp. Report TR-7806-0977, June 1978
9	Anon	The solar power satellite and its technology development. Grumman unnumbered report, April 1978
10	A.D. Tonelli A.A. Nussberger	The design and evaluation of a 5 GW GaAlAs solar power satellite. Proc. 13th IECEC, San Diego, Paper 789404, August 1978
11	G.R. Woodcock	Solar power satellite systems definition. Proc. Royal Aero. Soc./AIAA Conference on Energy and Aerospace, London, December 1978
12	Anon	Orbital construction support equipment. Final report. NASA CR-151460, June 1977

034

REFERENCES (continued)

No.	Author	Title, etc
13	Anon	Satellite power system. Concept development and evaluation program. NASA/DOE Report DOE/ER-0023, October 1978
14	W. Muench	Automatic fabrication of large space structures - the next step. AIAA Paper 78-1651 (1978)
15	Anon	Preliminary environmental assessment for the satellite power system (SPS). Volume 2. Detailed assessment. NASA/DOE Report DOE/ER-0021/2, October 1978
16	H.L. Oman D.L. Gregory	Solar power satellites - heat engines or solar cells? AIAA Paper 78-1684 (1978)
17	E.H. Cooke-Yarborough	Solar power satellites: a study of the relative merits of different power conversion options. AERE Harwell Report G1285, January 1979
18	M. Goodman W.B. Thomson	A 5-GWe nuclear satellite power system conceptual design. Paper 789562, 13th IECEC (1978)
19	D. Baker	Space shuttle: a user's guide. Flight International, pp 1552-1558, 20 May 1978
20	J. Ruth W. Westphal	MOSGEN - potential European contribution in developing solar generators suitable for growing power levels up to SPS systems. Proc. European Symp. on Photovoltaic Generators in Space, Noordwijk, Holland, September 1978. ESA SP-140, pp 161-166, November 1978
21	J. Ruth W. Westphal	Study on European aspects of solar power satellites Volume 1. Final report. ESA CR(P) 1266, June 1979
22	D. Kassing K.K. Reinhartz	Energy for Europe from space? *ESA J.*, 2, 3, 179-187 (1978)

034

References (continued)

No.	Author	Title, etc
23	R.M. Shelton	Solar power satellites - challenge to European industry. *J. Brit. Interplan. Soc.*, 33, 2, 73-78, February 1980
24	S.L. Entres, Ed.	Report on study field 'B' - space power systems - of an investigation of the industrialisation of space. General Technology Systems Ltd, Report GT 78008/B-2, February 1979
25	D. Kassing	Will the US develop solar power satellites? A summary of the state-of-the-art. ESA Report (unnumbered), July 1978
26	C. Kalweit K.K. Reinhartz	Report on the satellite power system (SPS) program review, held in Washington DC on June 5-8, 1979. ESA Report TF/CK/cg/6838, July 1979
27	C. Covault	Solar power satellite studied. *Aviation Week and Space Technology*, 110, 4, 14-15, 22 January 1979
28	C. Covault	NASA shifts large structures planning. *Aviation Week and Space Technology*, 110, 15, 43-49, 9 April 1979
29	R.S. Lewis	Solar satellites fly on nuclear misfortunes. *New Scientist*, 82, 1157, 710, 31 May 1979
30	K.A. Ehricke	Regional and global energy transfer via passive power relay satellites. In 'Technology today and tomorrow', Proc. 10th Space Congress, Cocoa Beach, Florida, pp 5-15 to 5-94, April 1973
31	H. Oman	Solar cells for solar power satellites. Proc. European Symposium on Photovoltaic Generators in Space, Noordwijk, Holland, September 1978. ESA SP-140, pp 133-138, November 1978
32	V.A. Caluori H. Oman	Photovoltaic solar power satellites. Paper 779231, 12th IECEC (1977)

REFERENCES (continued)

No.	Author	Title, etc
33	R.O. Piland	The solar power satellite concept evaluation program. In 'Radiation Energy Conversion in Space', edited by K.W. Billman, *Prog. in Aeronautics and Astronautics,* 61, 3 (1978)
34	Anon	Powersat. Preliminary considerations of interaction with the ionosphere and troposphere. CCIR Study Groups Document P/61-E, May 1978
35	J.E. Drummond	Optimizing a low cost satellite energy system. Paper 779243, Proc. 12th IECEC (1977)
36	J.E. Drummond	Thermal stability of earth's ionosphere under power transmitting satellites. IEEE Trans. Plasma Sci., PS-4, p 228 (1976)
37	L.M. Duncan W.E. Gordon	Final report. Ionosphere/microwave beam interaction study. NASA CR-151517, September 1977
38	K. Hughes	The effects of a power satellite transmission on the ionosphere and troposphere. Proc. IEE Conference on Solar Power Satellite Systems, London, April 1979
39	P.E. Glaser O.E. Maynard J. Mackovciak E.L. Ralph	Feasibility study of a satellite solar power station. NASA CR-2357, February 1974
40	T.E. Redding	Solar power satellite concepts and potential related space systems. Paper 779236, 12th IECEC (1977)
41	L.J. Cantafio V.A. Chobotov M.G. Wolfe	GSSPS. Taking a new approach to the space solar power station. *Astronautics and Aeronautics,* 15, 11, 36-43, November 1977
42	G.M. Hanley	Evolution of satellite power system (SPS) concepts. Proc. 13th IECEC, San Diego, Paper 789403, August 1978

034

REFERENCES (continued)

No.	Author	Title, etc
43	Anon	Solar power satellite. System definition study. Part 1, Volume III. Construction, transportation and cost analyses. NASA CR-151556; Boeing Report D180-20689-3, August 1977
44	H.G. Edler	Satellite power system (SPS). DOE/NASA Report TID-29094, October 1978
45	P.E. Glaser G.M. Hanley R.H. Nansen R.L. Kline	First steps to the solar power satellite. *IEEE Spectrum*, 16, 52-58, May 1979
46	G.R. Woodcock	Solar satellites. Space key to our power future. *Astronautics and Aeronautics*, 15, 30-43, July/August 1977
47	D.L. Gregory	Thermal engine solar power satellites. Paper 779232, Proc. 12th IECEC (1977)
48	C. Covault	Views change on power satellite work. *Aviation Week and Space Technology*, 109, 3, 42-46, 17 July 1978
49	C. Covault	Nuclear-powered spacecraft study set. *Aviation Week and Space Technology*, 109, 6, 44-45, 7 August 1978
50	E.V. Pawlik W.M. Phillips	A nuclear electric propulsion vehicle for planetary exploration. AIAA Paper 76-1041 (1976)
51	R. Caputo	Comparative assessment of orbital and terrestrial central power plants. Paper 779244, 12th IECEC (1977)
52	Anon	Space power reactor being developed. *Aviation Week and Space Technology*, 109, 16, 53, 16 October 1978
53	M. Manoff	Solar power satellite thermal analysis. Paper 789483, 13th IECEC (1978)
54	W.B. Lenoir *et al*	Critical areas: solar power systems concepts. NASA TM X-74694, July 1975

REFERENCES (continued)

No.	Author	Title, etc
55	S.M. Michaelson	Protection guides and standards for microwave exposure. From 'Radiation hazards'. AGARD LS-78, August 1975
56	I.R. Lindsay	Institute of Naval medicine. Private Communication, October 1978
57	R.M. Dickinson	SPS microwave subsystem potential impacts and benefits. In 'Radiation Energy Conversion in Space', edited by K.W. Billman, AIAA, pp 25-35 (1978)
58	Anon	Solar threat to radioastronomy. *New Scientist*, 80, 1130, 590, 23 November 1978
59	J.F. Coneybear	The use of lasers for the transmission of power. In 'Radiation Energy Conversion in Space', edited by K.W. Billman. *Prog. in Astronuatics and Aeronautics*, 61, 279-310 (1978)
60	C.N. Bain	Potential of laser for SPS power transmission. US Department of Energy Report HCP/R-4024-07, October 1978
61	A. Hertzberg K. Sun W.S. Jones	A laser-powered flight transportation system. AIAA Paper 78-1484 (1978)
62	A. Hertzberg K. Sun	Laser aircraft propulsion. In 'Radiation Energy Conversion in Space', edited by K.W. Billman. *Prog in Astronautics and Aeronautics*, 61, 243-263 (1978)
63	A.N. Pirri R.F. Weiss	Laser propulsion. AIAA Paper 72-719 (1972)
64	C.A. Robinson	Soviets test beam technologies. *Aviation Week and Space Technology*, 109, 20, 14-20, 13 November 1978
65	M.W.J. Bell	Advanced launch vehicle systems and technology. *Spaceflight*, 20, 4, 135-143, April 1978
66	E.E. Davis	Power satellite construction location considerations. Paper 779234, 12th IECEC (1977)

034

REFERENCES (continued)

No.	Author	Title, etc
67	R.M. Bowman	AIAA position paper. Solar power satellites. Proc. 13th IECEC (1978)
68	D.G. Fearn	The use of ion thrusters for orbit raising. RAE Technical Report 78068 (1978)
69	N.E. Ives	Power decay characteristics for a solar-electrically propelled spacecraft during orbit expansion to synchronous height. RAE Technical Report 71075 (1971)
70	P.E. Glaser O.E. Maynard J. Mackovciak E.L. Ralph	Feasibility study of a satellite solar power station. NASA CR-2357, February 1974
71	W.J. Graff C.J. Huang *et al*	Solar power satellite: analysis of alternatives for transporting material to geosynchronous orbit. NASA TM X-74680 (1976)
72	F.A. Koomanoff	The DOE/NASA SPS concept development and evaluation program. Proc. Royal Aero. Soc./AIAA Conference on Energy and Aerospace, London, December 1978
73	G.R. Woodcock	Large-scale space operations for solar power satellites. AIAA Paper 77-1031 (1977)
74	K.H. Miller E. Davis	Solar power satellite construction and maintenance: the first large scale use of man-in-space. AIAA Paper 78-1637 (1978)
75	R.J. Salkeld D.W. Patterson	Space transportation - new headings for the future. *Astronautics and Aeronautics*, 16, 28-34, April 1978
76	R.J. Salkeld R. Beichel	Mixed-mode rocket vehicles for international space transportation systems. *Acta Astronautica*, 4, 213-227, January/February 1977
77	P. Bono	ROMBUS - an integrated system concept for a reusable orbital module (booster utility shuttle). AIAA Paper 63-271 (1963)

REFERENCES (continued)

No.	Author	Title, etc
78	Anon	The study of the application of combined air-breathing and rocket-propulsion systems to launch vehicles. North American Aviation Inc., Space and Information Systems Division, Report SID, 63-1223, December 1963
79	P. Bono	The rocket sled launching technique and its implication on performance of reusable ballistic (orbital/global) transport systems. Proc. Internat. Conf. on Planetology and Space Mission Planning, New York Academy of Sciences, October 1967
80	J.T. Lloyd	Study of alternate space shuttle concepts. Lockheed Missiles and Space Company, Report LMSC-A995931, Volume 2, Part 2, November 1971
81	Anon	Systems concepts for STS derived heavy-lift launch vehicles study - midterm review briefing. NASA Contract NAS9-14710, Boeing Aerospace Co., February 1976
82	J.A. Martin	Ramjet propulsion for single-stage-to-orbit vehicles. *J. Spacecraft and Rockets*, 15, 5, 259-260, September/October 1978
83	C. Covault	Soviets developing fly-back launcher. *Aviation Week and Space Technology*, 109, 19, 19-20, 6 November 1978
84	A. Bond	UKAEA Culham Laboratory/BIS. Private communication, November 1978
85	E.E. Davis K.H. Miller	Construction of a 10 GWe solar power satellite. Paper 789486, 13th IECEC (1978)
86	G.R. Woodcock E.E. Davis	Space transportation options for solar power satellites. *Aerospace and Science*, 1, 1, 29-32 (1977)
87	A.F. Tuck	Meteorological Office, Bracknell. Private communication, December 1978
88	Anon	Propulsion for the 1970s and 1980s. *Astronautics and Aeronautics*, 14, 4, 47 (1976)

REFERENCES (continued)

No.	Author	Title, etc
89	B.W. Knight, Jnr B.B. McInteer R.M. Potter E.S. Robinson	A metal Dumbo rocket reactor. AEC Research and Development Report LA-2091, Los Alamos Scientific Lab., Univ. of California, February 1957
90	B.A. Thrush	Recent developments in atmospheric chemistry. *Nature*, 276, 345-348, 23 November 1978
91	Anon	Environmental impact of shuttle. *New Scientist*, 77, 1090, 414, 16 February 1978
92	J. Gribbin	Fossil fuel: future shock? *New Scientist*, 79, 1117, 541-543, 24 August 1978
93	J.D. Haigh J.A. Pyle	A two-dimensional calculation including atmospheric carbon dioxide and stratospheric ozone. *Nature*, 279, 5710, 222-224, May 1979
94	Anon	Skylab's race against time. *New Scientist*, 79, 1118, 613, 31 August 1978
95	S. Glasstone, Ed.	The effects of nuclear weapons. US Atomic Energy Commission, April 1962. Also see earlier editions.
96	D.S. Kothari	Nuclear explosions and their effects. Publications Div., Indian Ministry of Information and Broadcasting, pp 43-46 (1958)
97	F.R. Livingston	Satellite power system (SPS) environmental impacts. Preliminary assessment. NASA CR-157952, April 1978
98	R.D. Burnett	Noise monitoring Titan III D launch Vandenberg AFB, Calif. Environmental Health Lab., McClellan AFB, Calif., Report EHL-M-75M-2, January 1975
99	R.A. Capell	Noise evaluation of the Athena-H booster. Environmental Health Lab., McClellan AFB, Calif., Report EHL-M-72M-23, November 1972
100	S. Guest J.H. Jones	Far-field acoustic environmental predictions for launch of Saturn V and a Saturn V MLV configuration. NASA TN D-4117, September 1967

REFERENCES (continued)

No.	Author	Title, etc
101	T.A. Holbeche	Private communication. Aerodynamics Department, RAE, December 1978
102	T.F.W. Embleton G.J. Thiessen J.E. Piercy	Propagation in an inversion and reflections at the ground. *J. Acoust. Soc. Amer.*, 59, 278-282 (1976)
103	M.J. Lighthill	Jet noise. *AIAA J.*, 1, 7, 1507-1517, July 1963
104	W.H. Mayes W.E. Lanford H.H. Hubbard	Near-field and far-field noise surveys of solid-fuel rocket engines for a range of nozzle exit pressures. NASA TN D-21 (1959)
105	H. Koelle	Handbook of astronautics. McGraw-Hill (1961)
106	F.A. White	Our acoustic environment. John Wiley and Sons, pp 41-42 (1975)
107	G.P. Sutton D.M. Ross	Rocket propulsion elements. John Wiley and Sons, pp 18, 20, 272 (1976)
108	H.F. Worsnop	Private communication. Space Department, RAE, January 1979
109	G.M. Hanley R. Bergeron	An overview of the SPS transportation system. AIAA Paper 78-975 (1978)
110	R.N. Tedrick	*J. Acoust. Soc. Amer.*, 36, 2027 (1964)
111	Anon	Solar power satellite. System definition study. Part 1. Volume 8. SPS launch vehicle ascent and entry sonic overpressure and noise effects. Boeing Report D180-20689-8, December 1977
112	Anon	Technology requirements for advanced earth-orbital transportation systems, dual-mode propulsion. NASA Contract NAS 2868, Martin-Marietta Aerospace Corp., June 1977

REFERENCES (continued)

No.	Author	Title, etc
113	A.K. Hepler H. Zeck W.H. Walker D.E. Shafer	Applicability of the control configured design approach to advanced earth orbital transportation systems. NASA CR-2723, August 1978
114	R.W. Taylor	Powersat - a viable solar power option. *Aerospace and Science,* 1, 1, 44-50 (1977)
115	D. Grim	Electric propulsion for solar power satellites. AIAA Paper 78-695 (1978)
116	J. Rhea	Support builds for power satellites. *Industrial Res./Dev.,* 20, 35-36, July 1978
117	P.E. Glaser	Solar power satellite developments. *J. Astronaut. Sciences,* 26, 2, 101-127, April/June 1978
118	J.J. Rehder K.E. Wurster I.O. MacConochie P.J. Klich	Propulsion options for space-based orbital transfer vehicles. *J. Spacecraft and Rockets,* 16, 5, 333-337, September/October 1979
119	Anon	Soviets take manned space time lead. *Aviation Week and Space Technology,* 109, 6, 21, 7 August 1978
120	J.P.B Cuffe	RL10 derivative engines for space tug. 1974 JANNAF Propulsion Meeting Proceedings, Volume 1, Part 1, October 1974
121	H.G. Diem	Advanced space engine for the orbit transfer vehicle. IAF Paper 77-101, October 1977
122	Y. Ohara	Numerical simulation for design of a two-stage acceleration system in a megawatt power ion source. *J. Appl. Phys.,* 49, 9, 4711-4717, September 1978
123	R.E. Austin	Cargo orbit transport systems for space industrialization. Proc. AIAA/MSFC Symposium on Space Industrialization, Marshall Space Flight Center, May 1976. NASA CP-2026, pp 252-274

034

REFERENCES (continued)

No.	Author	Title, etc
124	K. Clark	Survey of electric propulsion capability. AIAA Paper 74-1082 (1974). *J. Spacecraft and Rockets*, 12, 11, 641-654, November 1975
125	D.G. Fearn	Electric propulsion in the UK. Proc. 3rd European Electric Propulsion Conference, Hinterzarten, W. Germany, October 1974. DGLR - Fachbuchreihe Band 5, pp 22-30
126	Staff of Space Department RAE	The UK ion thruster system and a proposed future programme. RAE Technical Report 77063 (1977)
127	W.R. Kerslake	Status of SERT II spacecraft and ion thrusters - 1978. AIAA Paper 78-662 (1978)
128	R.C. Finke	Highlights 1979 - electric propulsion. *Astronautics and Aeronautics*, 52-55, December 1979
129	Ion Physics Department Staff Hughes Research Laboratories	Fabrication and verification testing of ETM 30 cm diameter ion thrusters. NASA CR-135193, April 1977
130	S. Nakanishi E.V. Pawlik	Experimental investigation of a 1.5 m diameter Kaufman thruster. *J. Spacecraft and Rockets*, 5, 7, 801-807, July 1968
131	C.R. Collett R.L. Poeschel	A 10000-hour endurance test of a 700 series 30 cm engineering model thruster. AIAA Paper, 76-1019 (1976)
132	S. Nakanishi	A 15000-hour cyclic endurance test of an 8 cm diameter mercury bombardment ion thruster. AIAA Paper 76-1022 (1976)
133	E.G. Wintucky	A 20000-hour endurance test of a structurally and thermally integrated 5 cm diameter ion thruster main cathode. AIAA Paper 75-368 (1975)
134	D.G. Fearn E.R. Wooding	The conical z-pinch plasma gun. *British J. Appl. Phys.*, 18, 2, 213-218, February 1967

034

REFERENCES (continued)

No.	Author	Title, etc
135	L.K. Rudolph R.G. Jahn K.E. Clark W.F. von Jaskowsky	Performance characteristics of quasi-steady MPD discharges. AIAA Paper 76-1000 (1976)
136	K. Kuriki	Electric propulsion work in Japan. AIAA Paper 76-1066 (1976)
137	A.J. Saber R.G. Jahn	Anode power in quasisteady magnetoplasmadynamic accelerators. *AIAA J.,* 16, 4, 328-333, April 1978
138	K.E. Clark R.G. Jahn W.F. von Jaskowsky	Projected characteristics of MPD thrusters. Princeton University Report (1977)
139	H.W. Loeb H.-G. Bischoff J. Freisinger K. Groh W. Pinks P. Shafer R. Schmiele	Recent tests of the RIT-10 engine at Giessen University. AIAA Paper 76-1037 (1976)
140	W. Pinks J. Lensin H.W. Loeb	The Giessen RF-primary propulsion engine RIT 35. AIAA Paper 76-1008 (1976)
141	A.G. Bailey	Investigation of a single spraying site on a colloid thruster. *J. Phys. D,* 6, 276-288 (1973)
142	S. Zafran F.B. Mead	Constant power, constant mass flow control colloid propulsion system. AIAA Paper 76-1043 (1976)
143	ESA	Field emission day. ESA SP-119, March 1977
144	G. Eschard A. Pelissier J. Paulin J.F. Bonnal	Experimental studies of a linear strip cesium contact ion thruster. *J. Spacecraft and Rockets,* 13, 4, 193-197, April 1976
145	R.L. Poeschel R.P. Vahrenkamp	High power operation of a 30 cm mercury bombardment ion thruster. AIAA Paper 76-1007 (1976)

REFERENCES (continued)

No.	Author	Title, etc
146	E.L. James W.D. Ramsey	A prototype 12 cm cesium ion thruster for north-south stationkeeping. AIAA Paper 75-387 (1975)
147	R.M. Worlock E.L. James R.E. Hunter R.O. Bartlett	The cesium bombardment engine north-south stationkeeping experiment on ATS-6. AIAA Paper 75-363 (1975)
148	G.L.R. Mair	A comment in the shape of the current sheet in a coaxial accelerator. *J. Phys. D*, 11, 13, 1911-1916, September 1978
149	G.C. Oates J.K. Richmond Y. Aoki G. Grohs	Loss mechanisms of a low temperature plasma accelerator. Boeing Report, D1-82-0124, July 1961
150	B. Burgess	Radio frequency accelerators for space propulsion. RAE Technical Memorandum Rad 804 (1967)
151	R.J. Vondra	The MIT Lincoln Laboratory pulsed plasma thruster. AIAA Paper 76-998 (1976)
152	D.G. Fearn	Cyclic life-tests of T5 thruster hollow cathodes. AIAA Paper 78-708 (1978)
153	D.C. Byers V.K. Rawlin	Electron bombardment propulsion system characteristics for large space systems. AIAA Paper 76-1039 (1976)
154	W.T. Lord R.C. Parkinson K. Allen J.A. Donovan P.J. Sherwood	Hydrogen resistojets for primary propulsion of communications satellites. Rocket Propulsion Establishment Tech. Memo. 605 (1972)
155	W.T. Lord R.C. Parkinson	Two-stage (resistojet/ion motor) transfer of communications satellites. AIAA Paper 70-1116 (1970)
156	R.C. Parkinson	Cost optimisation of a resupplied communications satellite system with mixed-thruster electric propulsion. Rocket Propulsion Establishment Tech. Report 20 (1974)

REFERENCES (continued)

No.	Author	Title, etc
157	R.J. Adornato	Space based solar power conversion and delivery system-photovoltaic concept. Proc. AIAA/MSFC Symposium on Space Industrialization, May 1976. NASA CP-2026, February 1978
158	L.K. Fero	Advanced space transportation overview. Proc. AIAA/MSFC Symposium on Space Industrialization, Marshall SFC, May 1976. NASA CP-2026, pp 119-158
159	J.B. Weddell W.V. McRae S.T. Cerri	Self-powered electric propulsion of satellite power systems. AIAA Paper 78-694 (1978)
160	J.E. Cake G.R. Sharp J.C. Oglebay F.J. Shaker R.J. Zavesky	Modular thrust sub-system approaches to solar electric propulsion module design. AIAA Paper 76-1062 (1976)
161	S. Glasstone	Sourcebook on the space sciences. D. Van Nostrand Co. (1965)
162	N.E. Ives	Power decay characteristics for a solar-electrically propelled spacecraft during orbit expansion to synchronous height. RAE Technical Report 71075 (1971)
163	H. Oman	Solar cells for solar power satellites. Proc ESTEC Symposium on Photovoltaic Generators in Space, Noordwijk, Holland, September 1978
164	Anon	*Aviation Week and Space Technology*, 109, 24, 11, 11 December 1978
165	Anon	Solar power satellite. System definition study. Part I. Volume VI. Evaluation data book. Boeing Report D180-22876-6, December 1977
166	M.R. Douglas *et al*	Identification and preliminary discussion of potential interactions of space power satellites with the earth's magnetosphere. JPL Contract 954663, Maya Development Corp., Final Report, May 1977

REFERENCES (continued)

No.	Author	Title, etc
167	R.R. Vondrak	Environmental impacts of large space facilities. Proc. Princeton University Conference on Space Manufacturing Facilities, May 1975
168	J.J. Rehder K.E. Wurster	The effect of technology advancements on the comparative advantages of electric versus chemical propulsion for a large cargo orbit transfer vehicle. AIAA Paper 78-696 (1978)
169	Anon	Sweden strides towards a solar society. *New.Scientist*, 79, 1117, 550-552, 24 August 1978
170	G. Woodcock	Solar power satellites - a system overview. Paper 779233, 12th IECEC (1977)
171	Anon	Satellite power system (SPS) concept development and evaluation program plan. July 1977-August 1980. NASA and US Department of Energy, Report DOE/ET-0034, February 1978
172	-	Combustion generated pollution. Science Research Council, Chapter 4, Table 10 (1976)
173	A.F. Tuck	A comparison of one-, two- and three-dimensional model representations of stratospheric gases. *Phil. Trans. Roy. Soc.*, A290, 477-494 (1979)
174	J.H. Seinfeld	Mathematical modelling of the polluted troposphere. In ' NASA Reference Publication 1022, Man's Impact on the Troposphere', edited by J.S. Levine and D.R. Schryer, pp 203-253, September 1978
175	R.P. Turco R.C. Whitten I.G. Poppoff L.A. Capone	SSTs, nitrogen fertiliser and stratospheric ozone. *Nature*, 276, 805-807, December 1978
176	I.G. Poppoff R.C. Whitten R.P. Turco L.A. Capone	An assessment of the effect of supersonic aircraft operations on the stratospheric ozone content. NASA Reference Publication 1026, August 1978
177	J.K. Angell J. Korshover	*Mon. Weath. Rev.*, 106, 725 (1978)

REFERENCES (continued)

No.	Author	Title, etc
178	R.J. Murgatroyd, Ed.	The report of the committee on meteorological effects of stratospheric aircraft (COMESA). 1972-1975, Part 1. Meteorological Office (1975)
179	R.W. Stewart S. Hameed J. Pinto	The natural and perturbed troposphere. In NASA Reference Publication 1022, Man's Impact On the Troposphere, edited by J.S. Levine and D.R. Schryer, pp 27-64, September 1978
180	G.W.C. Kaye T.H. Laby	Tables of physical and chemical constants. 14th ed., Longman, p 133 (1973)
181	G.M. Woodwell R.H. Whittaker W.A. Reiners G.E. Likens C.C. Delwiche D.B. Botkin	The biota and the world carbon budget. *Science*, 199, 4325, 141-146 (1978)
182	D.R.J. Viewing C.J. Horswell	Is catastrophe possible? *J. Brit. Interplan. Soc.*, 31, 209-216, June 1978
183	R.J. Murgatroyd, Ed.	The report of the committee on meteorological effects of stratospheric aircraft (COMESA). 1972-1975, Part 2. Meteorological Office (1975)
184	W.L. Chalmeides	Effect of variable energy input on nitrogen fixation in instantaneous linear discharges. *Nature*, 277, 5692, 123-125, January 1979
185	L.E. Reed	SO_2 emission in the UK. *Nature*, 273, 334, 1 June 1978
186	J. Gribbin	Monitoring halogens in the atmosphere. *New Scientist*, 81, 1138, 164-167, 18 January 1979
187	P. Goldsmith A.F. Tuck J.S. Foot E.L. Simmons R.L. Newson	Nitrogen oxides, nuclear weapon testing, Concorde, and stratospheric ozone. *Nature*, 244, 5418, 545-551, 31 August 1973

REFERENCES (continued)

No.	Author	Title, etc
188	C.D. Keeling W.G. Mook P.P. Tans	Recent trends in the $^{13}C/^{12}C$ ratio of atmospheric carbon dioxide. *Nature,* 277, 5692, 121-123, January 1979
189	K.S. Groves S.R. Mattingly A.F. Tuck	Increased atmospheric carbon dioxide and stratospheric ozone. *Nature,* 273, 711-715, 29 June 1978
190	C. Norman	Assessing the 'greenhouse' effect. *Nature,* 268, 5618, 289-290, 28 July 1977
191	T.M.L. Wigley P.D. Jones P.M. Kelly	Scenario for a warm, high-CO_2 world. *Nature,* 283, 5742, 17-21, January 1980
192	Anon	US warms to CO_2 research. *New Scientist,* 79, 1117, 531, 24 August 1978
193	R.C. Whitten W.J. Borucki L.A. Capone R.P. Turco	Effect of the reaction $HO_2 + O_3 \rightarrow OH + 2O_2$ on stratospheric ozone. *Nature,* 274, 5674, 523-524, 12 October 1978
194	A.D. Christie	Atmospheric ozone depletion by nuclear weapon testing. *J. Geophys. Res.,* 81, 15, 2583-2594, May 1976
195	G.C. Reid J.R. McAfee P.J. Crutzen	Effects of intense stratospheric ionisation events. *Nature,* 275, 489-492, 12 October 1978
196	J. Fishman P.J. Crutzen	The origin of ozone in the troposphere. *Nature,* 274, 5674, 855-858, 31 August 1978
197	M. Mendillo G.S. Hawkins J.A. Klobuchar	Sudden vanishing of the ionospheric F region due to the launch of Skylab. *J. Geophys. Res.,* 80, 16, 2217 (1975)
198	J. Zinn C.D. Sutherland G.M. Smith M.B. Pongratz	Predicted ionospheric effects from launches of heavy lift rocket vehicles for the construction of solar power satellites. Los Alamos Scientific Lab. Report LA-UR 78-1590, June 1978

REFERENCES (concluded)

No.	Author	Title, etc
199	W.O. Roberts R.H. Olson	New evidence for effects of variable solar corpuscular emission on the weather. Reviews of Geophys., II, 3, p 731 (1973)
200	L.K. Fero	Advanced space transportation overview. Proc. AIAA/MSFC Symposium on Space Industrialization, Marshall Space Flight Center, May 1976. NASA CP-2026, p 158

REPORTS QUOTED ARE NOT NECESSARILY
AVAILABLE TO MEMBERS OF THE PUBLIC
OR TO COMMERCIAL ORGANISATIONS

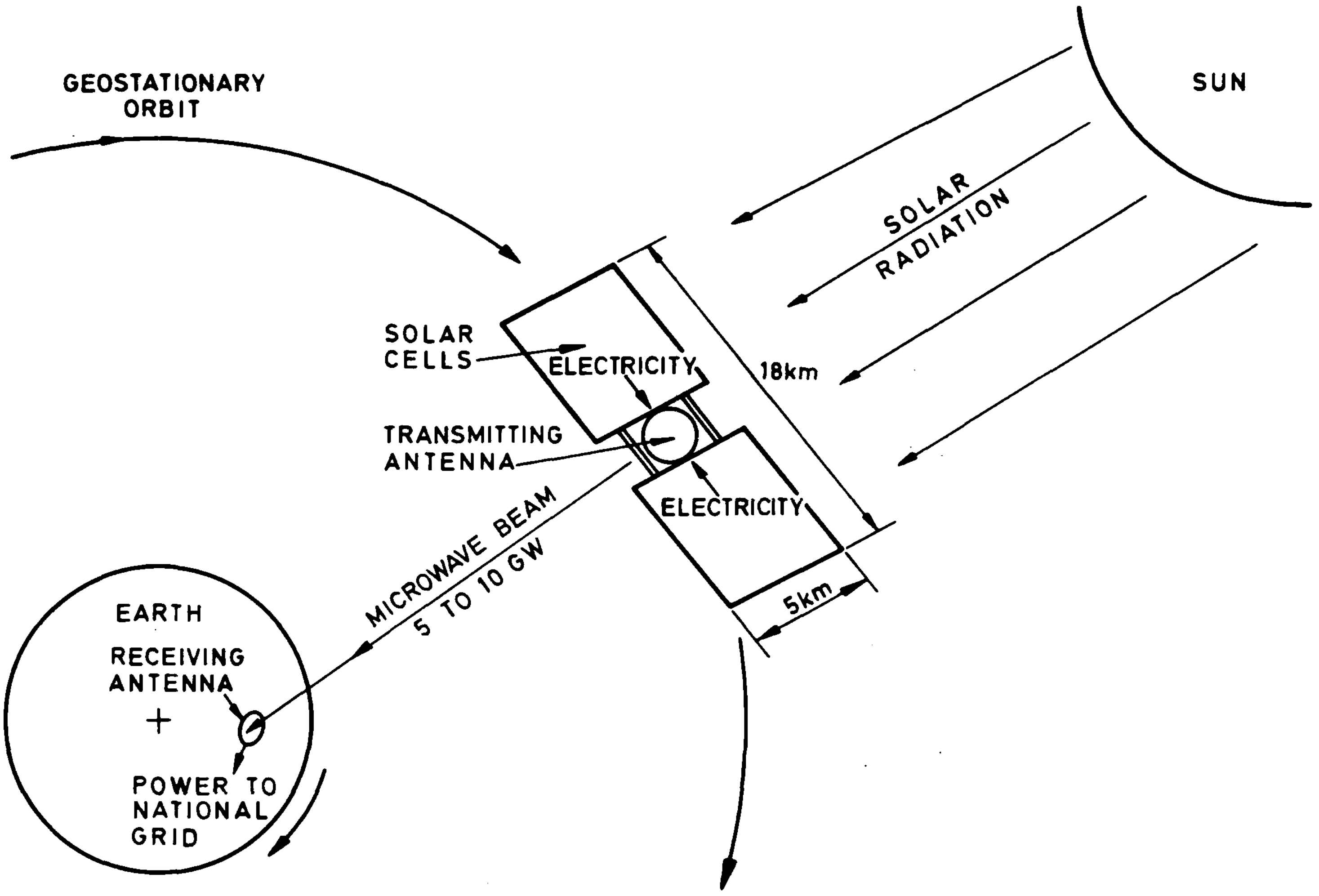
GEOSTATIONARY
ORBIT
SUN
SOLAR
RADIATION
SOLAR
CELLS
ELECTRICITY
18km
TRANSMITTING
ANTENNA
ELECTRICITY
MICROWAVE BEAM
5 TO 10 GW
5km
EARTH
RECEIVING
ANTENNA
POWER TO
NATIONAL
GRID

Fig 1 Schematic of principle of solar power satellite

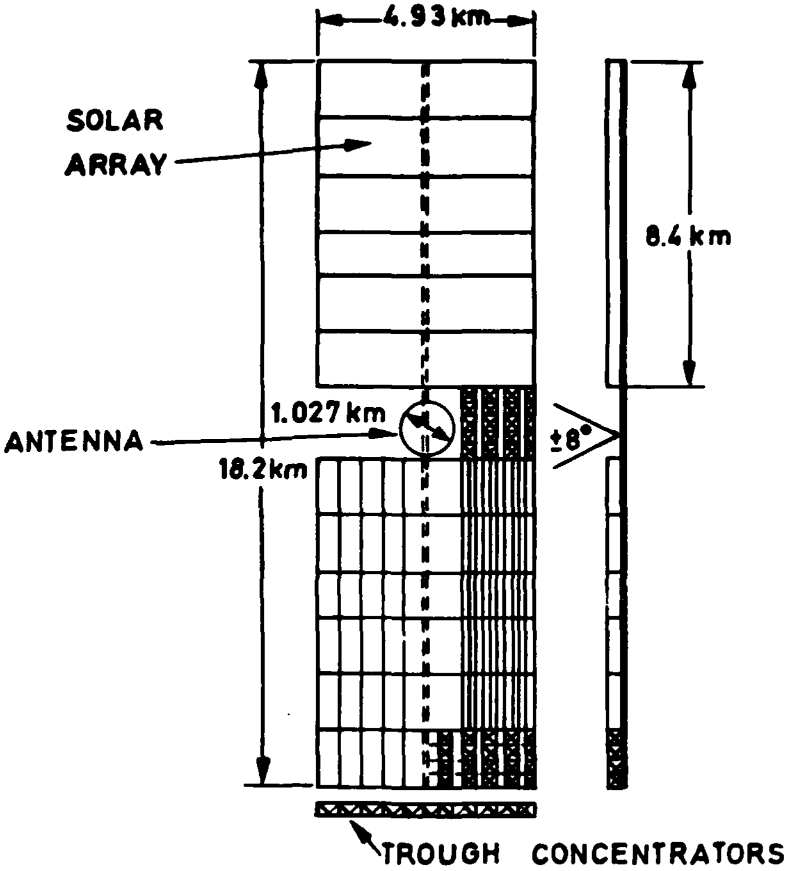
4.93 km
SOLAR ARRAY
8.4 km
1.027 km
ANTENNA
18.2km
±8°
TROUGH CONCENTRATORS

● POWER TO GRID	5000 MW
● MASS	27.2×10^6 kg
● SIZE	18.2 X 4.9 km
● ORBIT	GEOSYNCHRONOUS
● LIFE	30 YR
● OPERATING FREQ	2.45 GHz
● DC-TO-DC EFFIC	61.5%
● SOLAR CONV EFFIC	8.0% (16% BOL)
● CONCENTRATION RATIO (PLANAR MIRRORS)	<3

Fig 2 Typical 5GW SPS configuration (Grumman – Ref 9)

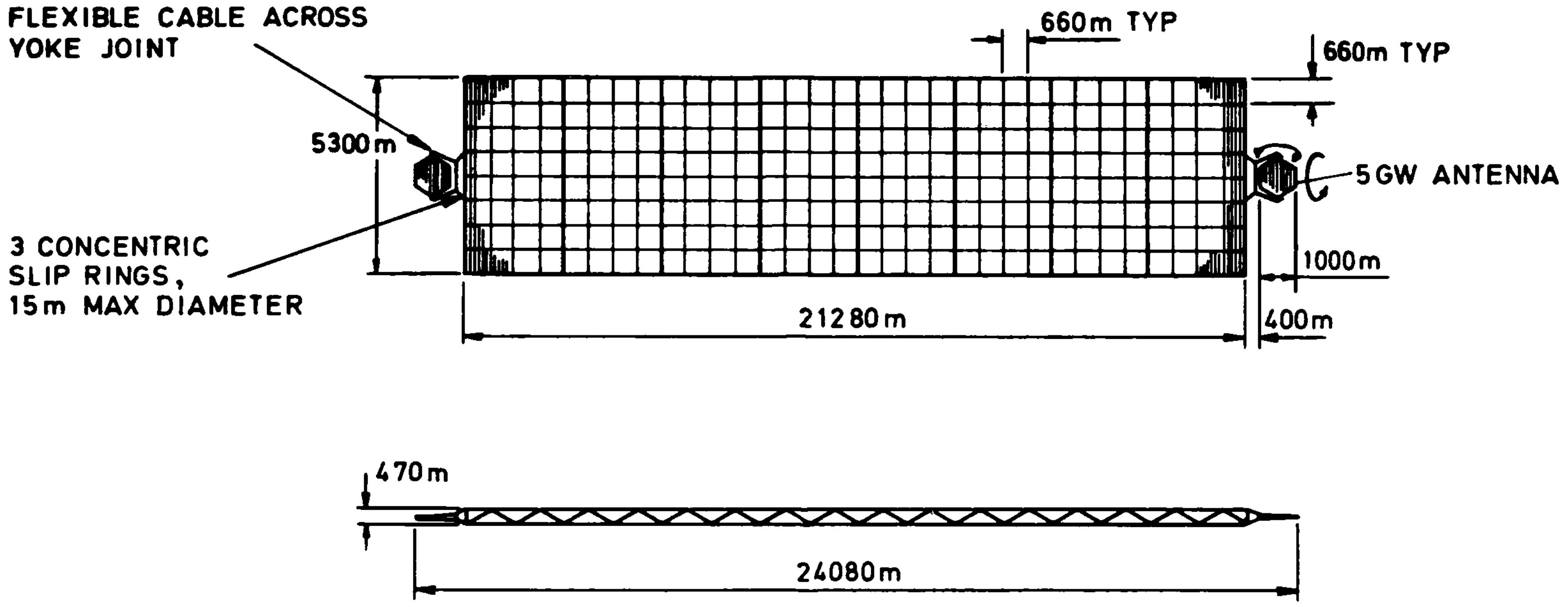
FLEXIBLE CABLE ACROSS YOKE JOINT
3 CONCENTRIC SLIP RINGS, 15m MAX DIAMETER
5300m
660m TYP
660m TYP
5GW ANTENNA
1000m
400m
21280m
470m
24080m

TOTAL SOLAR CELL AREA : 100km^2
TOTAL ARRAY AREA : 105km^2
TOTAL SATELLITE AREA : 113km^2
OUTPUT : 17GW MINIMUM TO SLIPRINGS

CELL AREA = 390 000m^2/BAY
PANEL AREA = 405 000m^2/BAY
ARRAY AREA = 410 000m^2/BAY
No OF BAYS = 256

Fig 3 Configuration of Boeing 10GW SPS (Refs 7, 33)

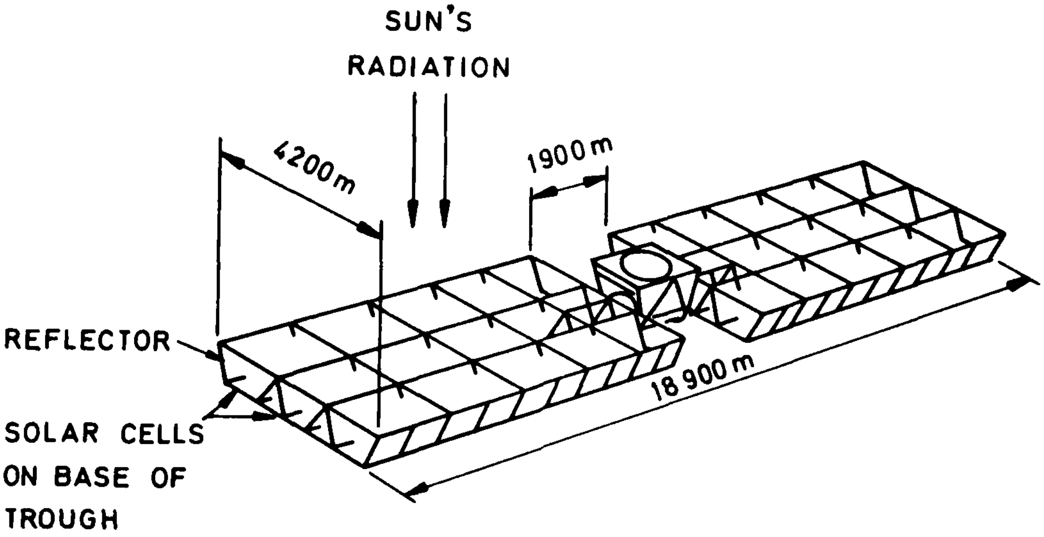
SUN'S
RADIATION
4200 m
1900 m
REFLECTOR
SOLAR CELLS
ON BASE OF
TROUGH
18 900 m

5 GW AT UTILITY INTERFACE
CENTRE - MOUNTED ANTENNA
3 TROUGH, COPLANAR ARRAY
CR = 2, GaAlAs CELLS
GEOSYNCHRONOUS ORBIT
CONSTRUCTION AND OPERATION

Fig 4 **Recommended gallium arsenide satellite concept employing concentrators (Rockwell – Ref 11)**

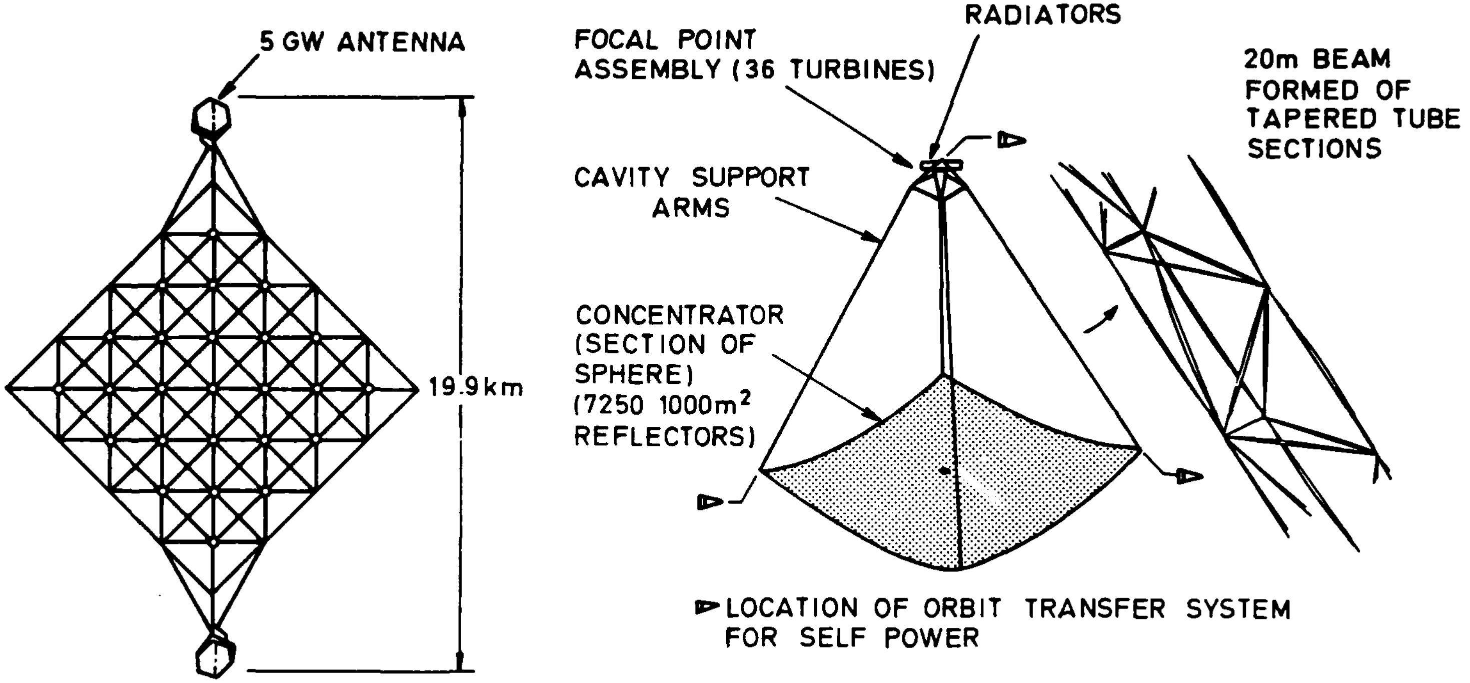
5 GW ANTENNA
19.9 km
FOCAL POINT ASSEMBLY (36 TURBINES)
RADIATORS
CAVITY SUPPORT ARMS
CONCENTRATOR (SECTION OF SPHERE) (7250 1000m² REFLECTORS)
20m BEAM FORMED OF TAPERED TUBE SECTIONS
▶LOCATION OF ORBIT TRANSFER SYSTEM FOR SELF POWER

COMPLETE SATELLITE

SINGLE MODULE (1248 MW OUTPUT)

Fig 5 Potassium-Rankine SPS concept (Boeing – Ref 31)

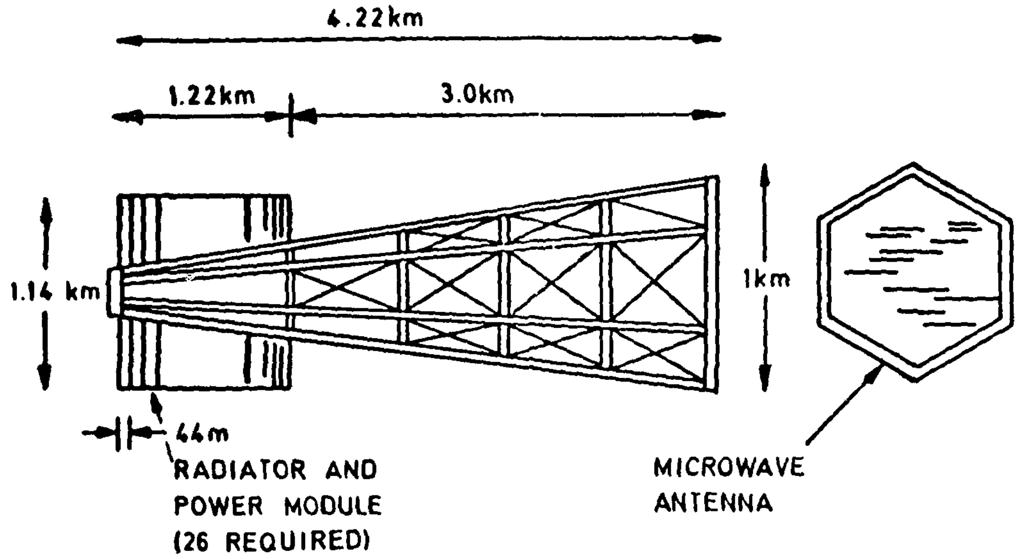
4.22km
1.22km
3.0km
1.14 km
1km
44m
RADIATOR AND
POWER MODULE
(26 REQUIRED)
MICROWAVE
ANTENNA

GENERAL CONFIGURATION

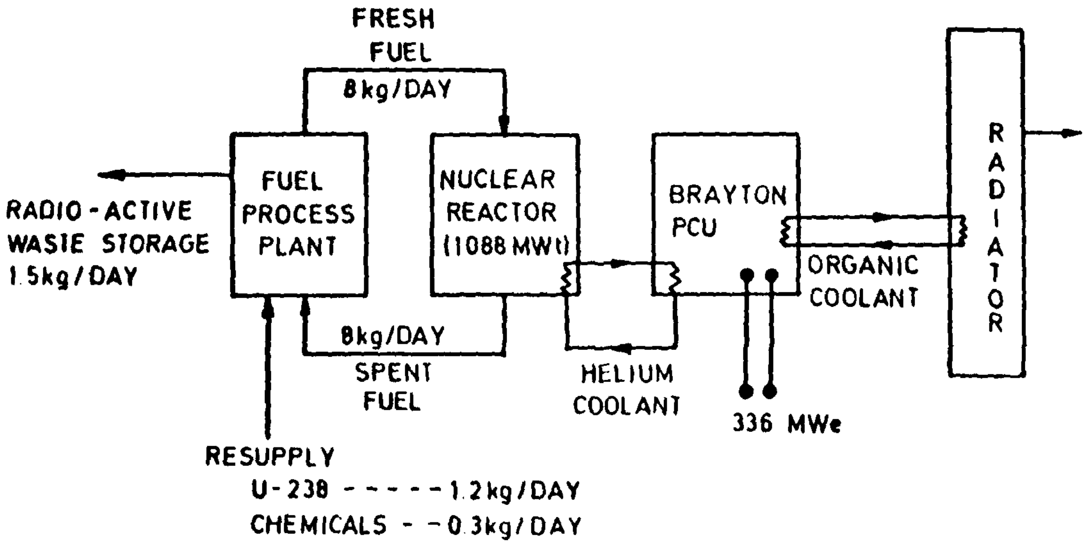
FRESH
FUEL
8kg/DAY
FUEL
PROCESS
PLANT
NUCLEAR
REACTOR
(1088 MWt)
BRAYTON
PCU
RADIATOR
RADIO-ACTIVE
WASTE STORAGE
1.5kg/DAY
ORGANIC
COOLANT
8kg/DAY
SPENT
FUEL
HELIUM
COOLANT
336 MWe
RESUPPLY
U-238 - - - - - 1.2kg/DAY
CHEMICALS - - 0.3kg/DAY

SCHEMATIC OF 336 MW POWER MODULE

Fig 6 Schematic of 5GW nuclear power satellite system (Atomics International – Ref 18)

TR 80034

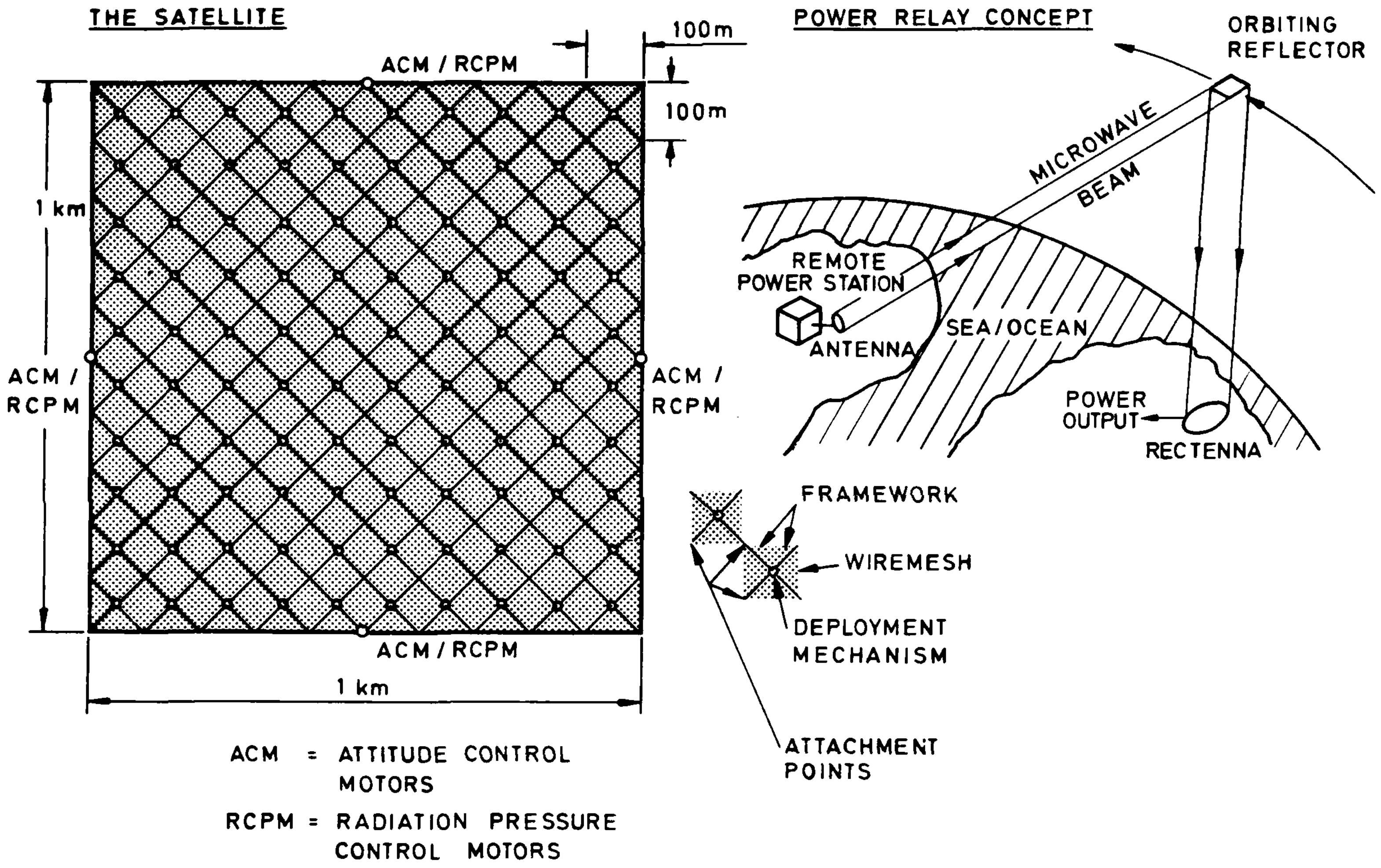
THE SATELLITE
100m
ACM / RCPM
100m
1 km
ACM / RCPM
ACM / RCPM
ACM / RCPM
1 km
ACM = ATTITUDE CONTROL MOTORS
RCPM = RADIATION PRESSURE CONTROL MOTORS
POWER RELAY CONCEPT
ORBITING REFLECTOR
MICROWAVE BEAM
REMOTE POWER STATION
ANTENNA
SEA/OCEAN
POWER OUTPUT
RECTENNA
FRAMEWORK
WIREMESH
DEPLOYMENT MECHANISM
ATTACHMENT POINTS

Fig 7 Schematic of power relay satellite (K.A. Ehricke – Ref 30)

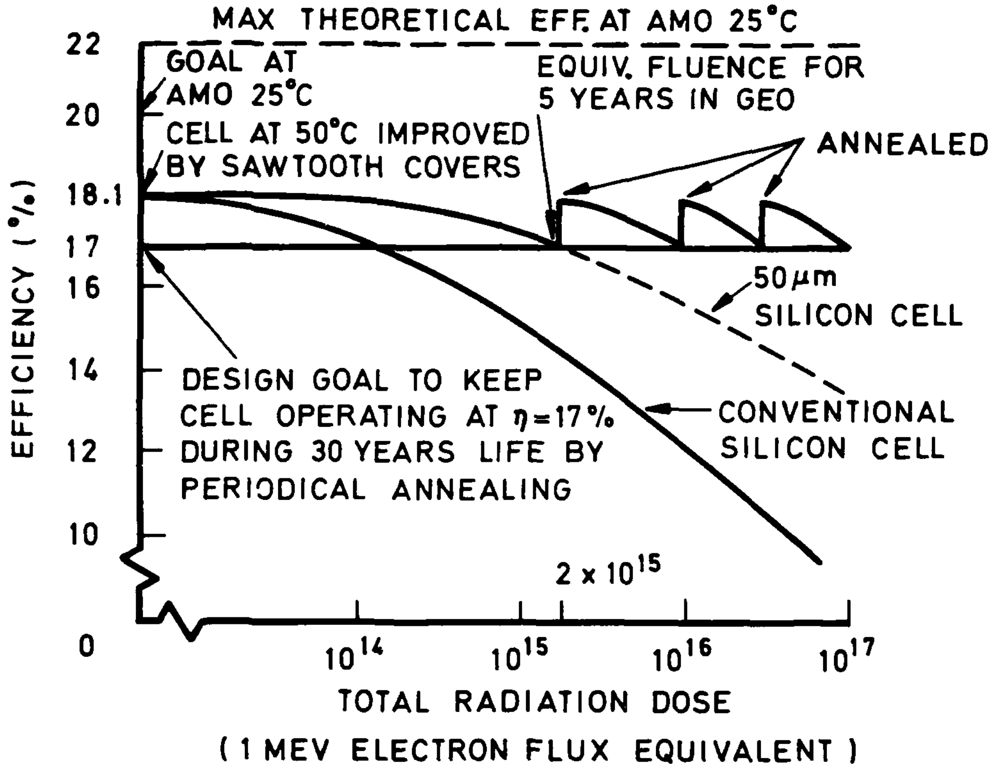

Fig 8 Annealing strategy for silicon solar cells (Grumman – Ref 9)

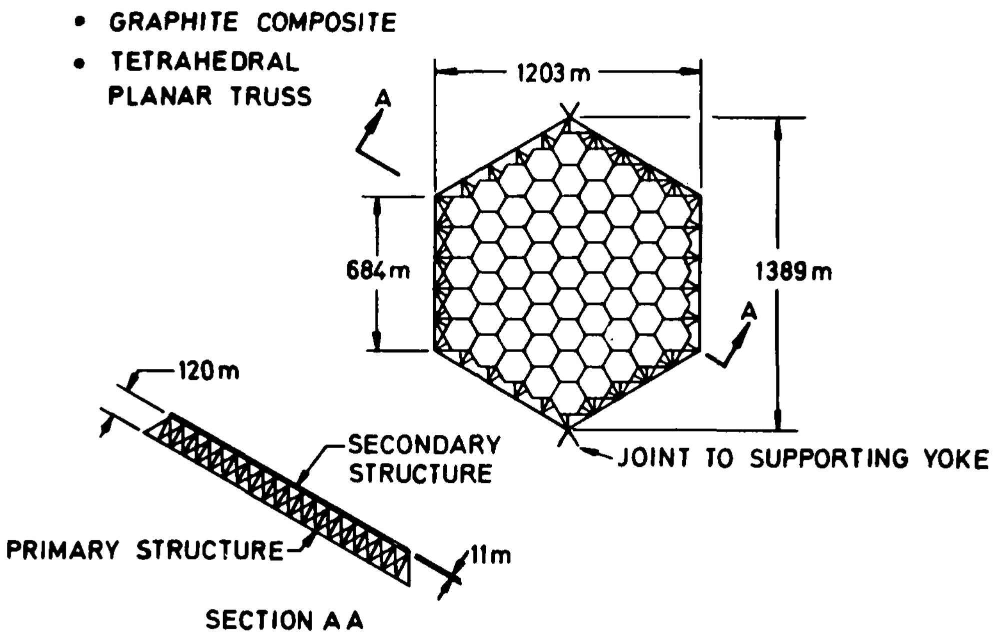
• GRAPHITE COMPOSITE
• TETRAHEDRAL PLANAR TRUSS
A
1203 m
684 m
1389 m
A
120 m
SECONDARY STRUCTURE
JOINT TO SUPPORTING YOKE
PRIMARY STRUCTURE
11 m
SECTION A A

ANTENNA PRIMARY STRUCTURE

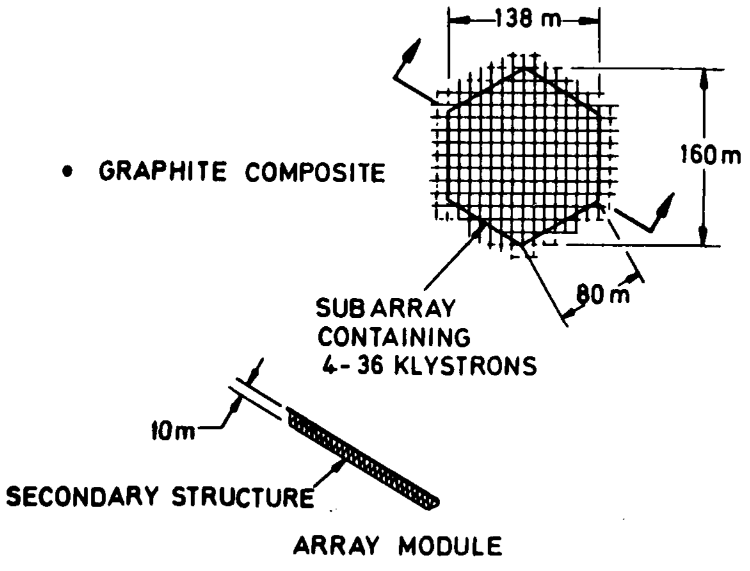
138 m
160 m
• GRAPHITE COMPOSITE
SUB ARRAY CONTAINING 4-36 KLYSTRONS
80 m
10 m
SECONDARY STRUCTURE
ARRAY MODULE

SECONDARY TRUSS-MODULE

Fig 9 Structure of SPS antenna (NASA – Ref 33)

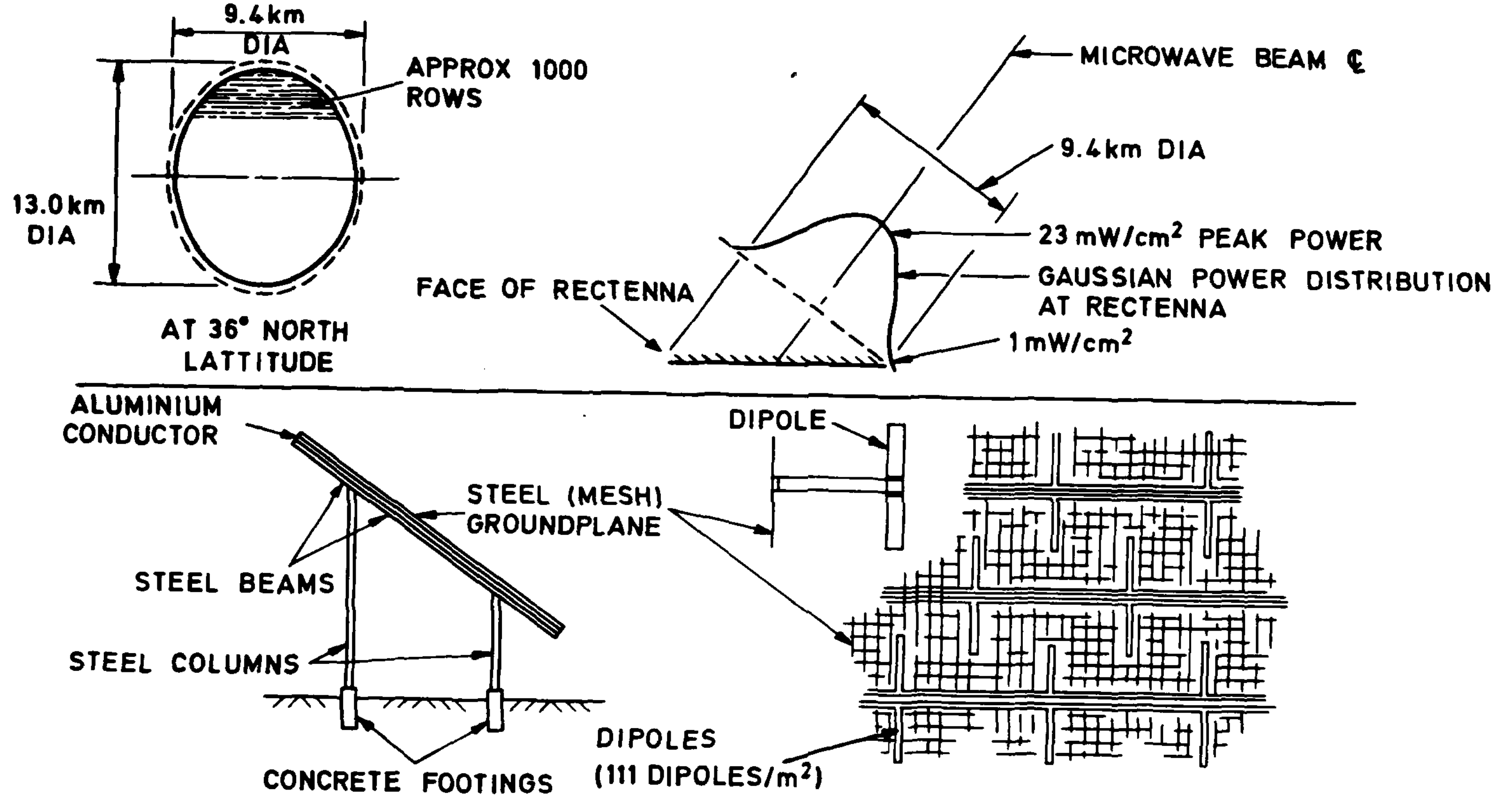
9.4km DIA
APPROX 1000 ROWS
13.0km DIA
AT 36° NORTH LATTITUDE
MICROWAVE BEAM ℄
9.4km DIA
23 mW/cm² PEAK POWER
GAUSSIAN POWER DISTRIBUTION AT RECTENNA
FACE OF RECTENNA
1 mW/cm²
ALUMINIUM CONDUCTOR
STEEL (MESH) GROUNDPLANE
STEEL BEAMS
STEEL COLUMNS
CONCRETE FOOTINGS
DIPOLE
DIPOLES
(111 DIPOLES/m²)

NOTE: SPACECRAFT HAS 1km DIA ANTENNA WITH 10 dB GAUSSIAN OUTPUT TAPER. POWER TO GRID IS 5GW

Fig 10 Schematic of ground rectenna for 5 GW power transmission (Grumman – Ref 9)

	1. 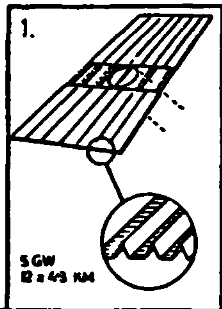	2. 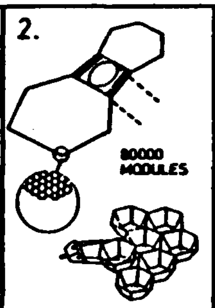	3. 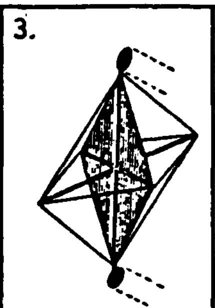	4. 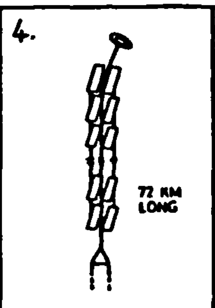	5. 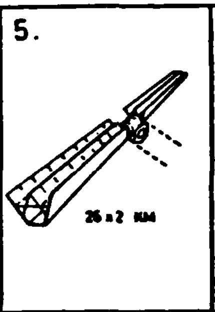	6. 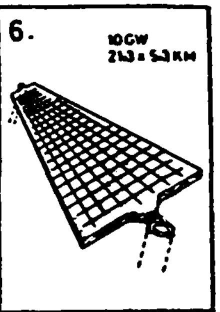
	SSPS	MOSES	CABLE/COLUMN	GSS^4PS	ROCKWELL REFERENCE SPS	BOEING REFERENCE SPS
First proposed by :	P. Glaser Arthur D. Little, Inc.	J. Ruth TU - Berlin	NASA-JSC	L.J. Cantafio Aerospace Corp.	Rockwell Internat.	Boeing Aerospace
In :	1973	1974	1976	1976	1976	1976
Main Characteristics	Truss configuration; Concentration ratio<3 Folded or rolled up single crystal silic. array	Modularized; Concentration ratio <3; About 80000 Modules	Structure based on 3 major columns and 12 cables	No concentration; Gravitationally stabilized	Concentration ratio < 3 with planar mirrors; Thin film, GaAlAs array, self annealing; Aluminium structure	No concentration; Silicon annealable; Lightweight blanket; Composite materials for basic structure
Advantages :	Easy to assemble; Sequential or parallel fabrication of structure	Completely modularised; STS principally applicable; Easy to assemble; Growth potential; Mass production of modules	Gradient gravity torque minimised by added counter weights	No propellant replenishment service required	Low gravity gradient torque; Gallium is less degradable than silicon	Simple structure; 2 antennae to balance microwave forces; No problem with degradation of reflecting surfaces; Self powered orbit transfer
Disadvantages :	High gravity gradient torque; Pointing accuracy; Structure surrounding microwave antenna	High gravity gradient torque; High voltage power distribution; Pointing accuracy; Structure surrounding microwave antenna	Difficult to assemble Shadowing of the cells by cable; Pointing accuracy	Very advanced RF technology required	Complex construct.; Single structural elements with centre antenna; Pointing accuracy; Gallium supply limited Higher technology cell	High gravity gradient torque at LEO; High specific weight

Fig 11 Characteristics of several SPS systems (Kassing – Ref 25)

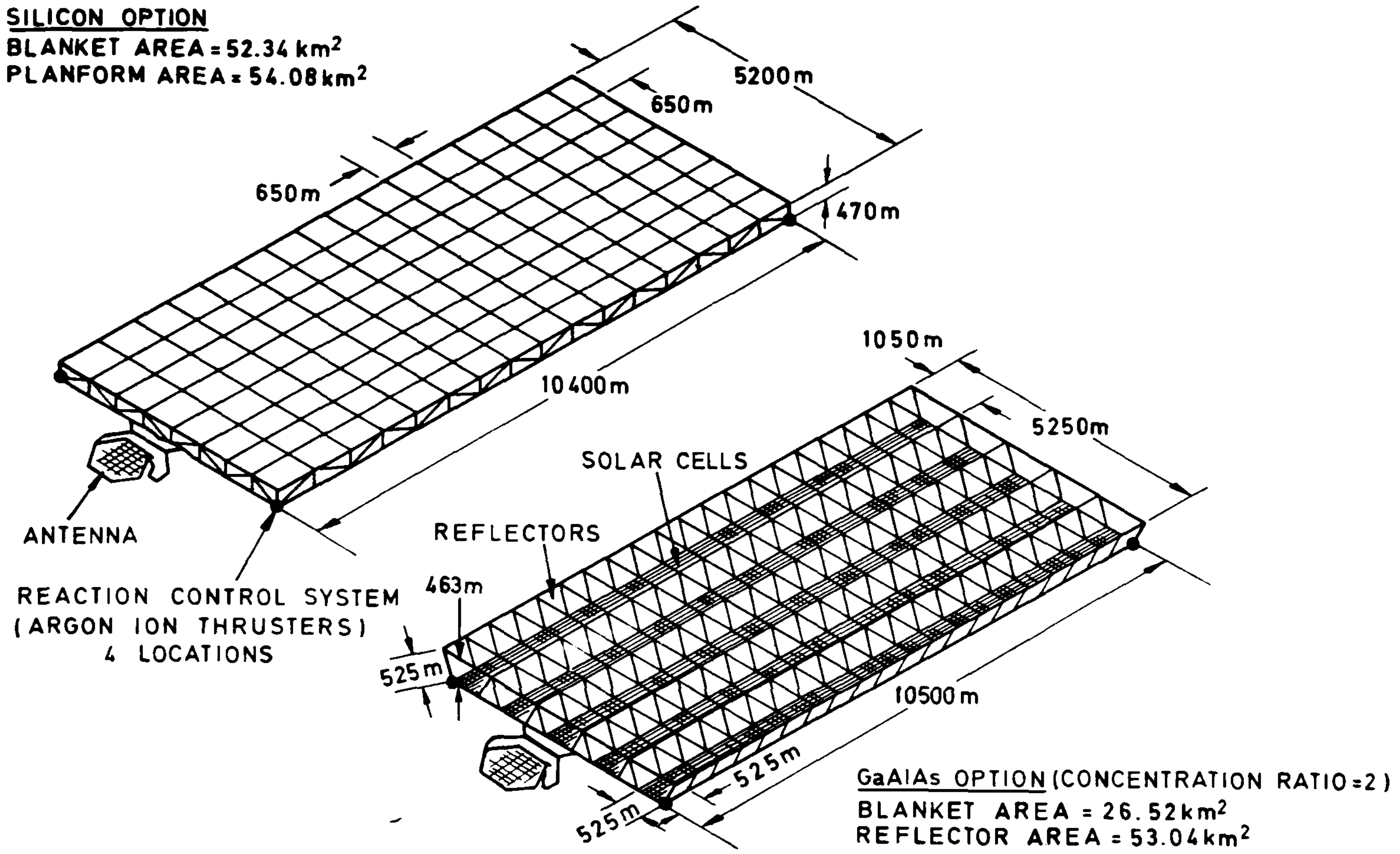
SILICON OPTION
BLANKET AREA = 52.34 km²
PLANFORM AREA = 54.08 km²
5200 m
650 m
650 m
470 m
10 400 m
ANTENNA
REACTION CONTROL SYSTEM
(ARGON ION THRUSTERS)
4 LOCATIONS
1050 m
5250 m
SOLAR CELLS
REFLECTORS
463 m
525 m
10500 m
525 m
525 m
GaAlAs OPTION (CONCENTRATION RATIO = 2)
BLANKET AREA = 26.52 km²
REFLECTOR AREA = 53.04 km²

Fig 12 DOE/NASA reference SPS systems (DOE/NASA – Ref 13)

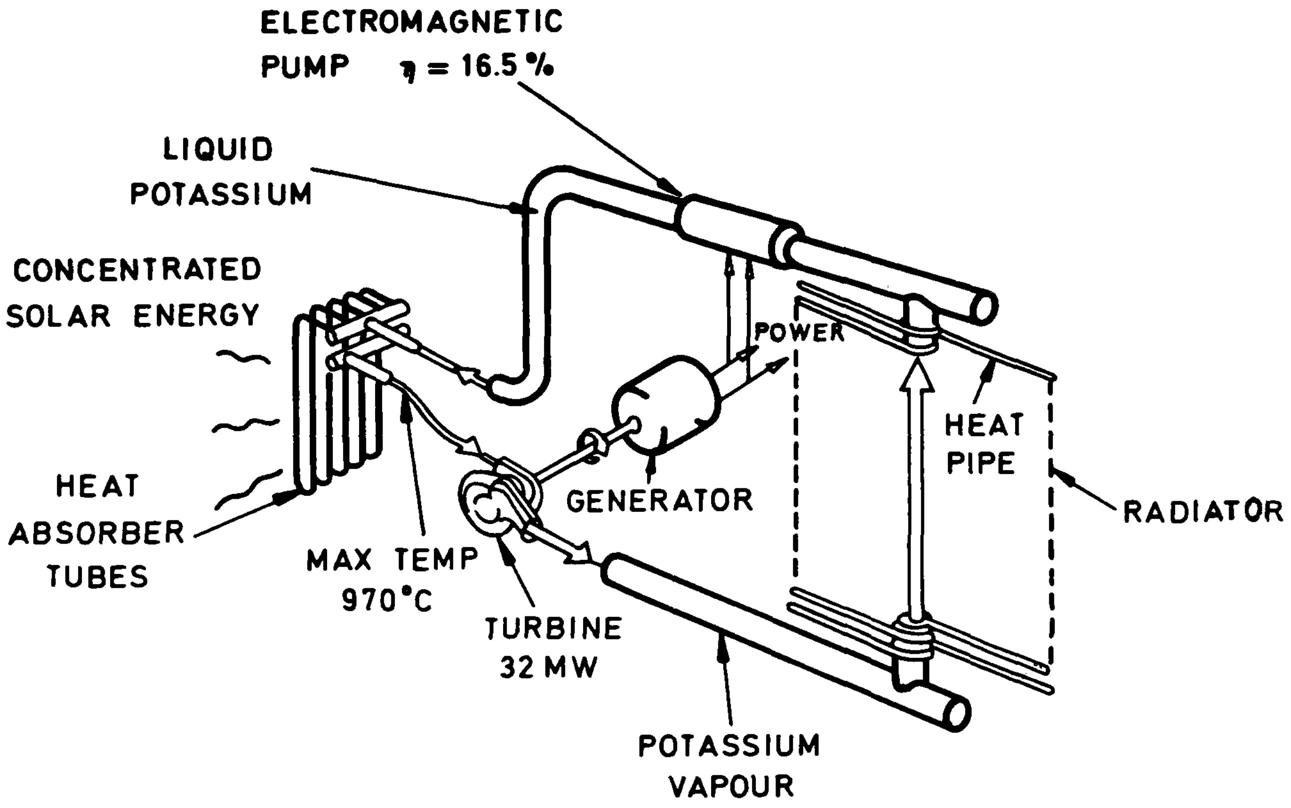
ELECTROMAGNETIC
PUMP $\eta = 16.5\%$
LIQUID
POTASSIUM
CONCENTRATED
SOLAR ENERGY
HEAT
ABSORBER
TUBES
MAX TEMP
970°C
TURBINE
32 MW
GENERATOR
POWER
HEAT
PIPE
RADIATOR
POTASSIUM
VAPOUR

Fig 13 Schematic of potassium–Rankine heat engine concept (Boeing – Ref 16)

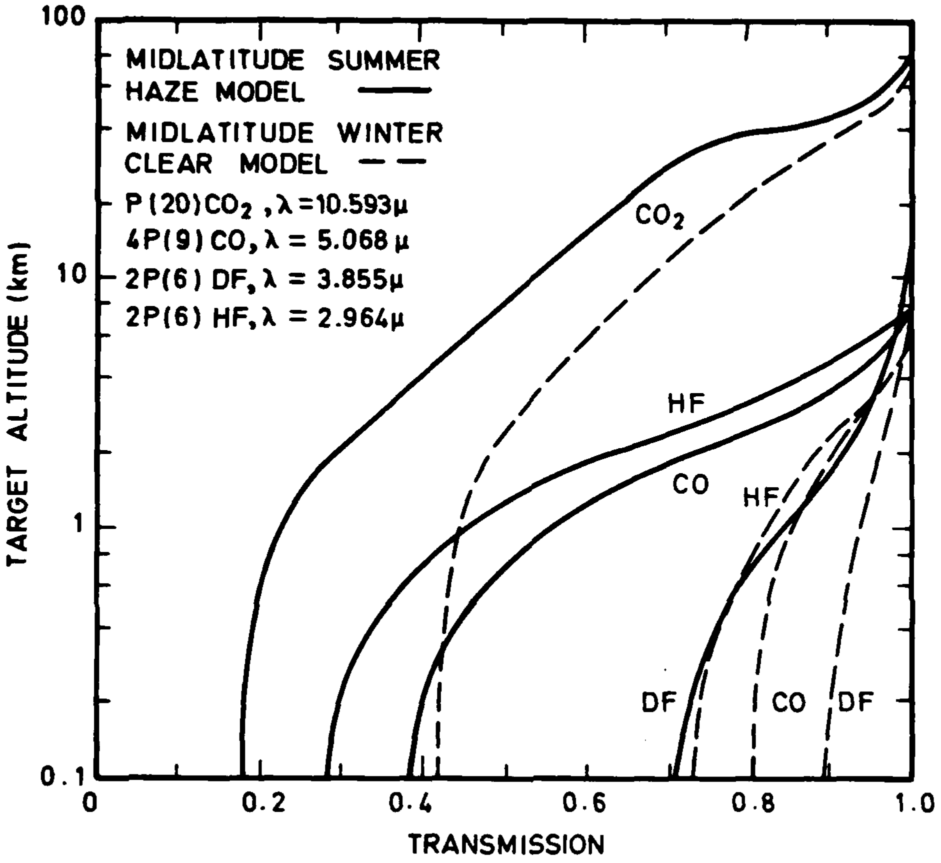

Fig 14 Atmospheric transmission, for selected laser wavelengths, from space to a target located at a range of altitudes (J.F. Coneybear – Ref 59)

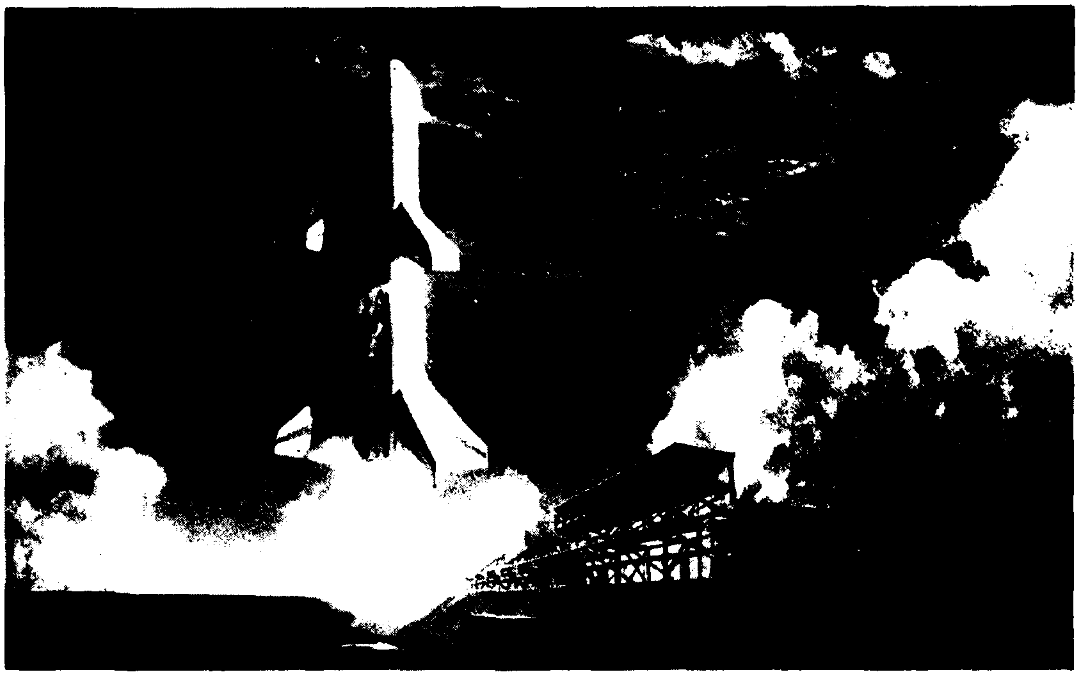

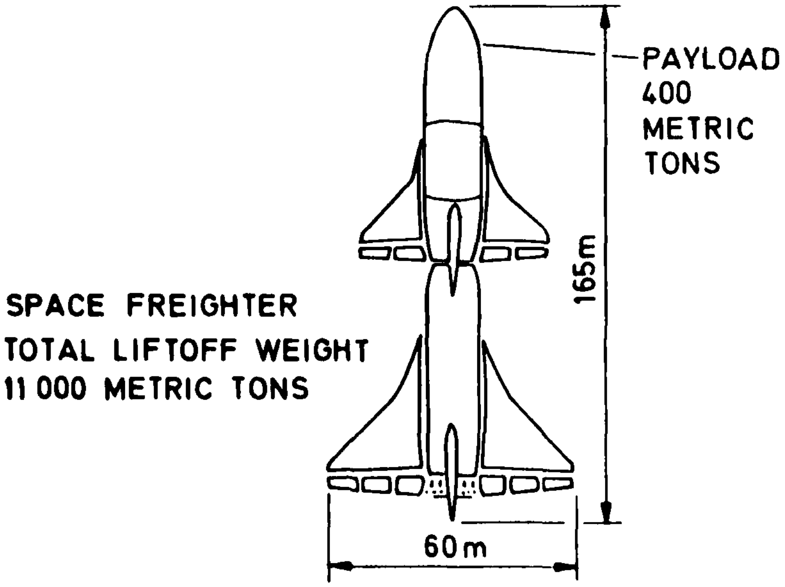
PAYLOAD
400
METRIC
TONS
SPACE FREIGHTER
TOTAL LIFTOFF WEIGHT
11 000 METRIC TONS
165m
60m

Fig 15 Outline diagram of Boeing HLLV concept, and artist's impression of its lift-off (Boeing – Ref 11)

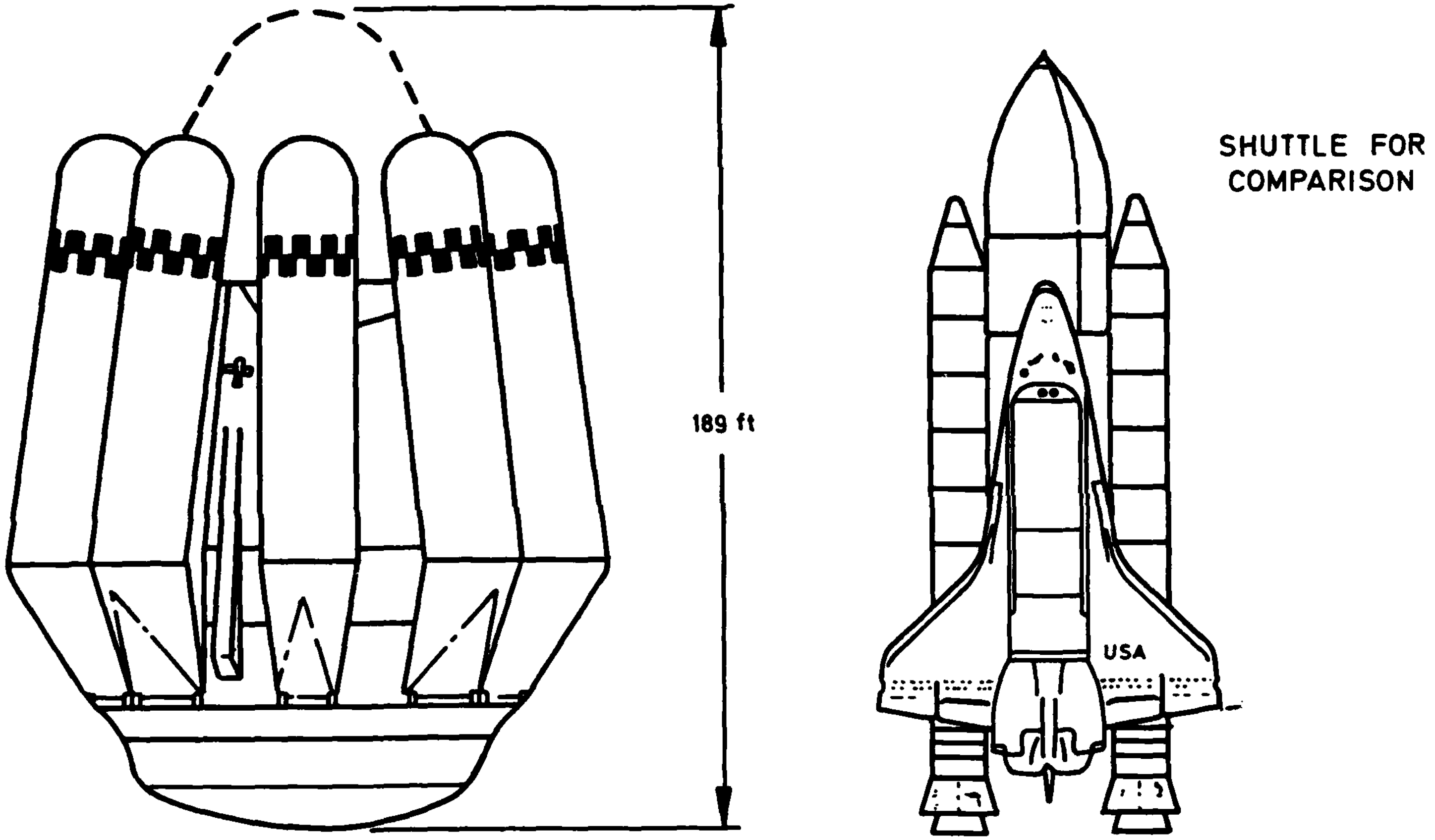
189 ft
SHUTTLE FOR COMPARISON
USA

Fig 16 Bono's concept for a single-stage-to-orbit HLLV (M.W.J. Bell/Spaceflight – Ref 65)

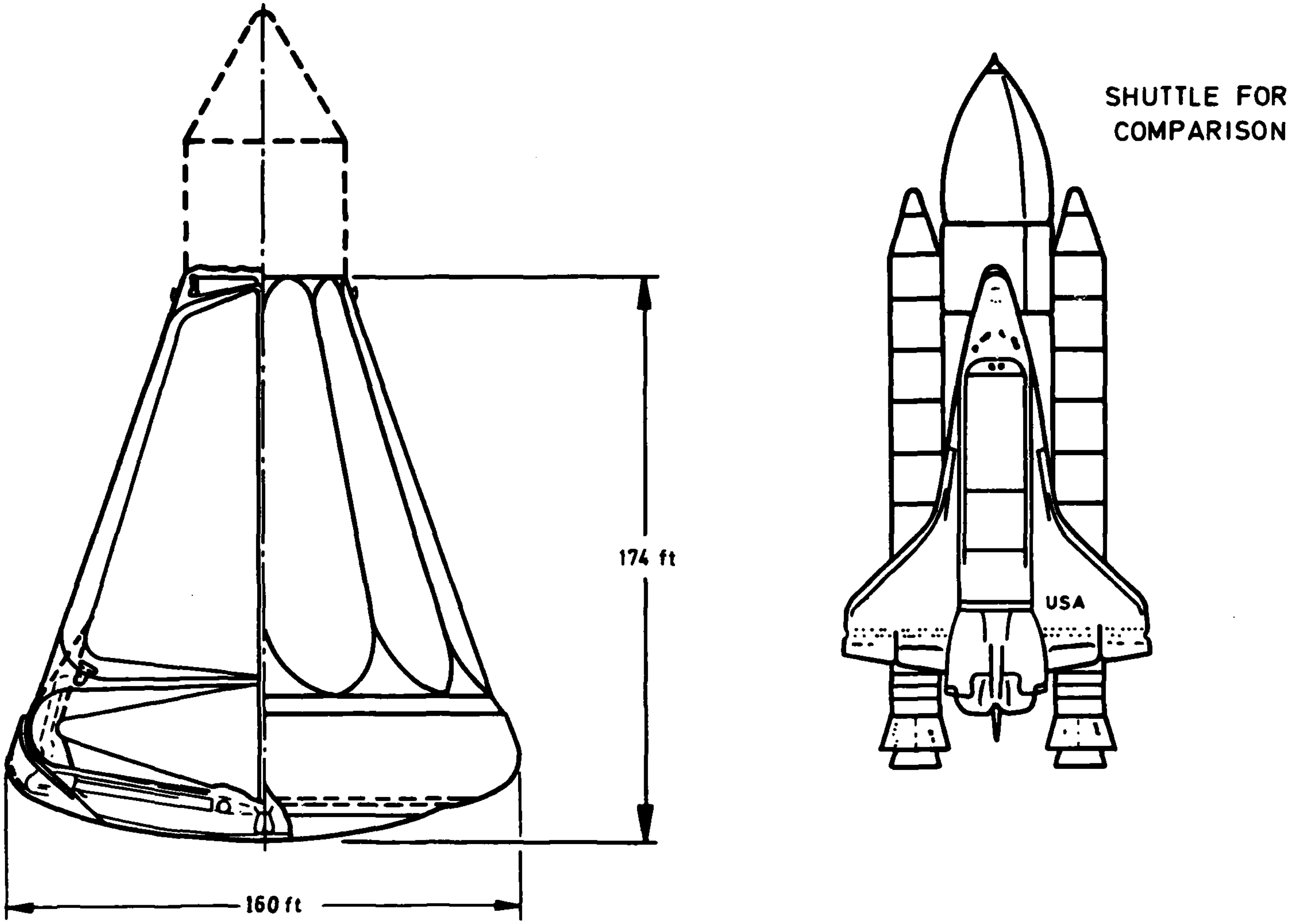
174 ft
160 ft
SHUTTLE FOR COMPARISON
USA

Fig 17a North American's single-stage-to-orbit concept, using optional air-augmented combustion (M.W.J. Bell/Spaceflight – Ref 65)

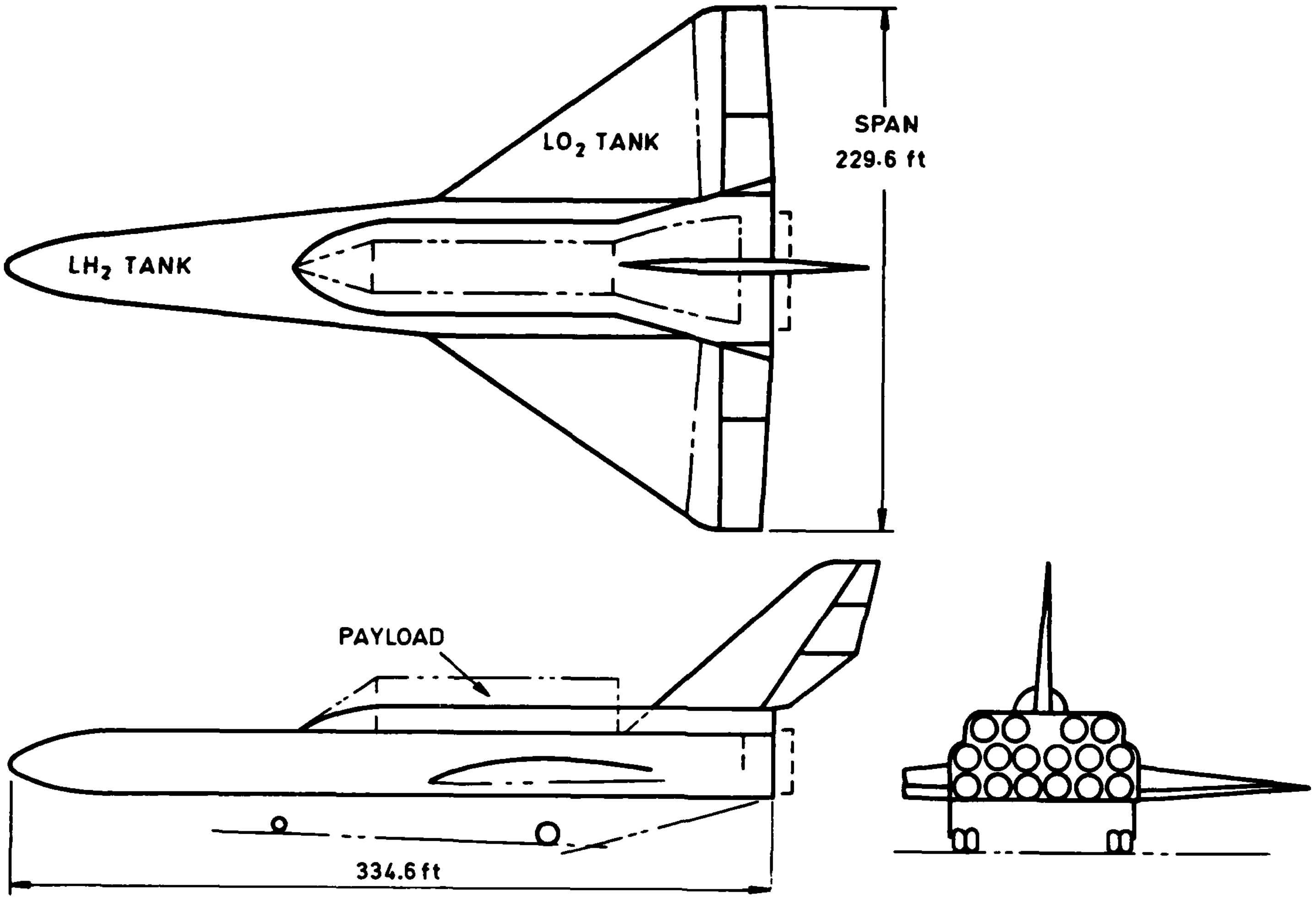
SPAN
229.6 ft
LO₂ TANK
LH₂ TANK
PAYLOAD
334.6 ft

Fig 17b Single-stage, winged HLLV proposed by Boeing (Spaceflight — Refs 65, 81)

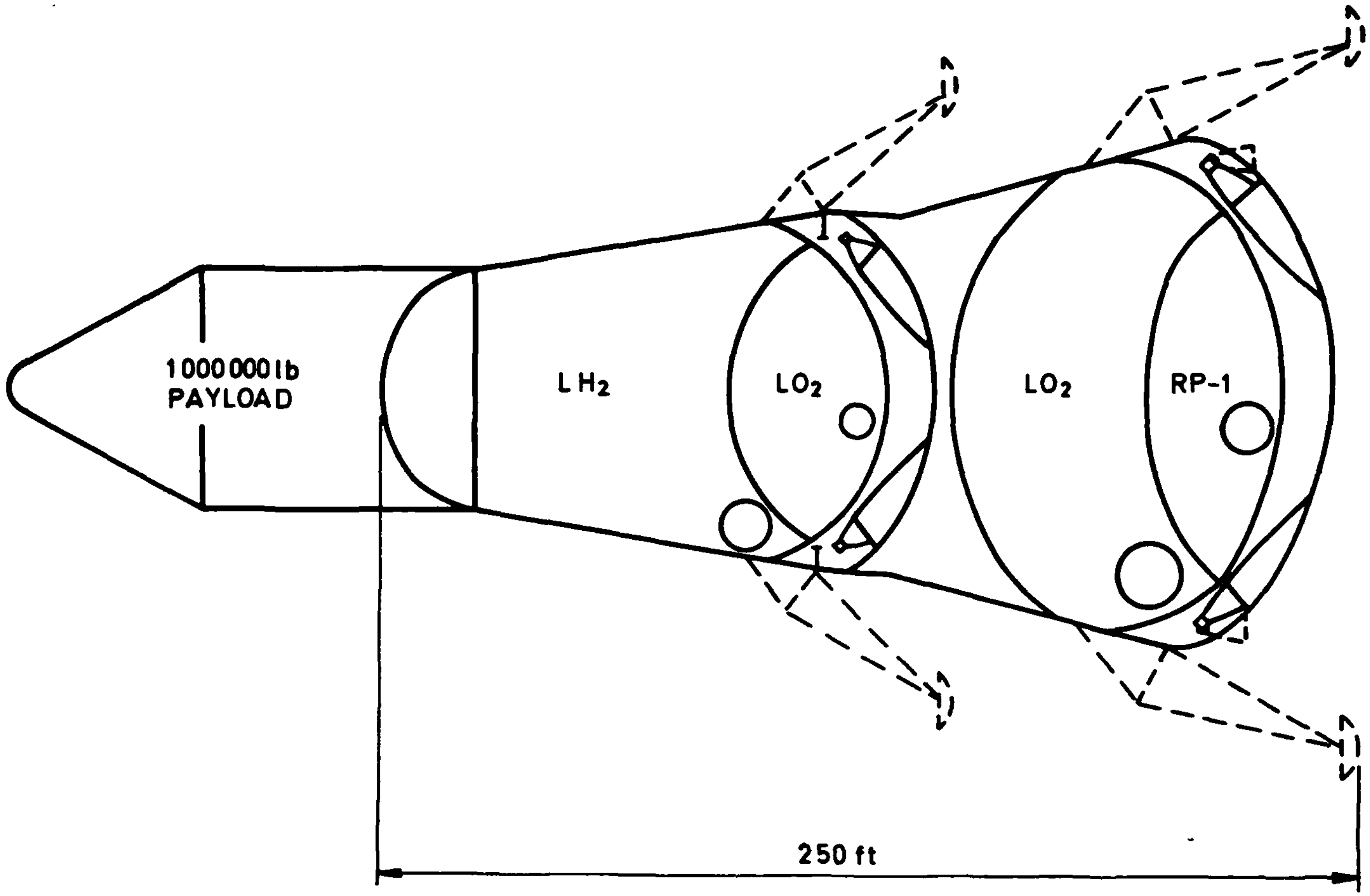
1000000lb
PAYLOAD
LH$_2$
LO$_2$
LO$_2$
RP-1
250 ft

Fig 18 Two-stage, low lift-to-drag ratio ballistic HLLV (M.W.J. Bell/Spaceflight – Ref 65)

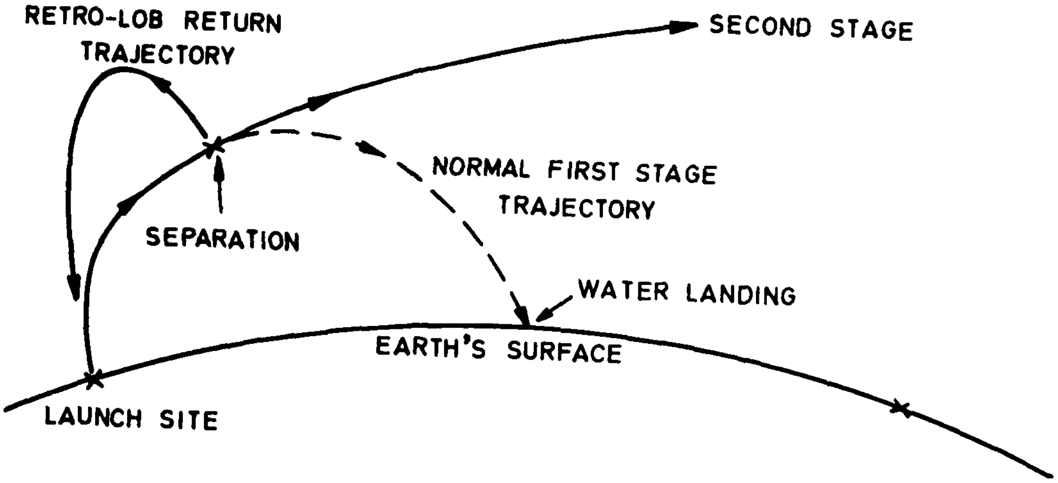
RETRO-LOB RETURN TRAJECTORY
SECOND STAGE
NORMAL FIRST STAGE TRAJECTORY
SEPARATION
WATER LANDING
EARTH'S SURFACE
LAUNCH SITE

Fig 19 Retro-lob ballistic manoeuvre

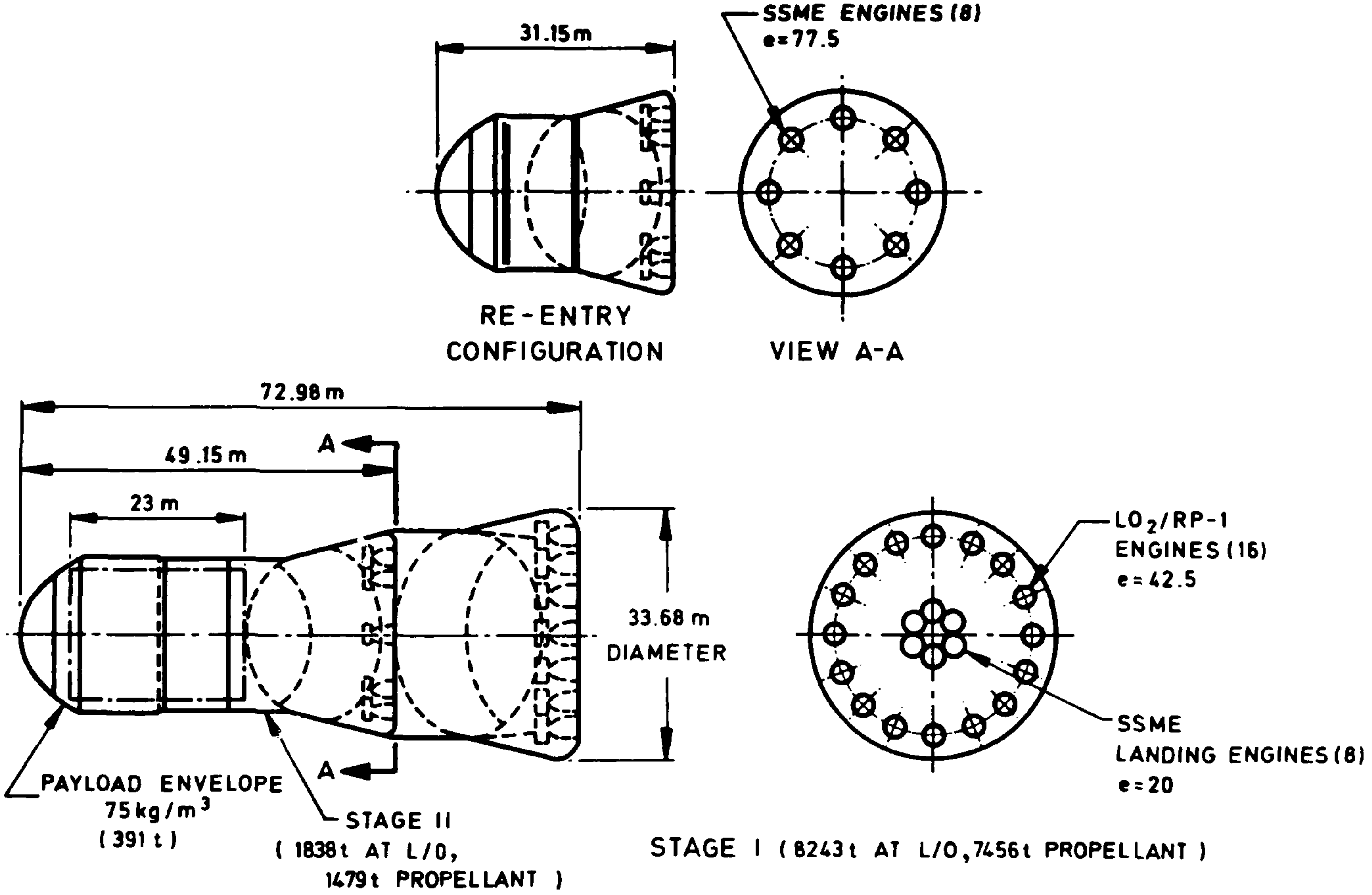
31.15 m
SSME ENGINES (8)
e=77.5
RE-ENTRY
CONFIGURATION
VIEW A-A
72.98 m
49.15 m
A
23 m
33.68 m
DIAMETER
A
LO$_2$/RP-1
ENGINES (16)
e=42.5
SSME
LANDING ENGINES (8)
e=20
PAYLOAD ENVELOPE
75 kg/m^3
(391 t)
STAGE II
(1838 t AT L/O,
1479 t PROPELLANT)
STAGE I (8243 t AT L/O, 7456 t PROPELLANT)

Fig 20 Two-stage ballistic HLLV concept (Boeing – Ref 43)

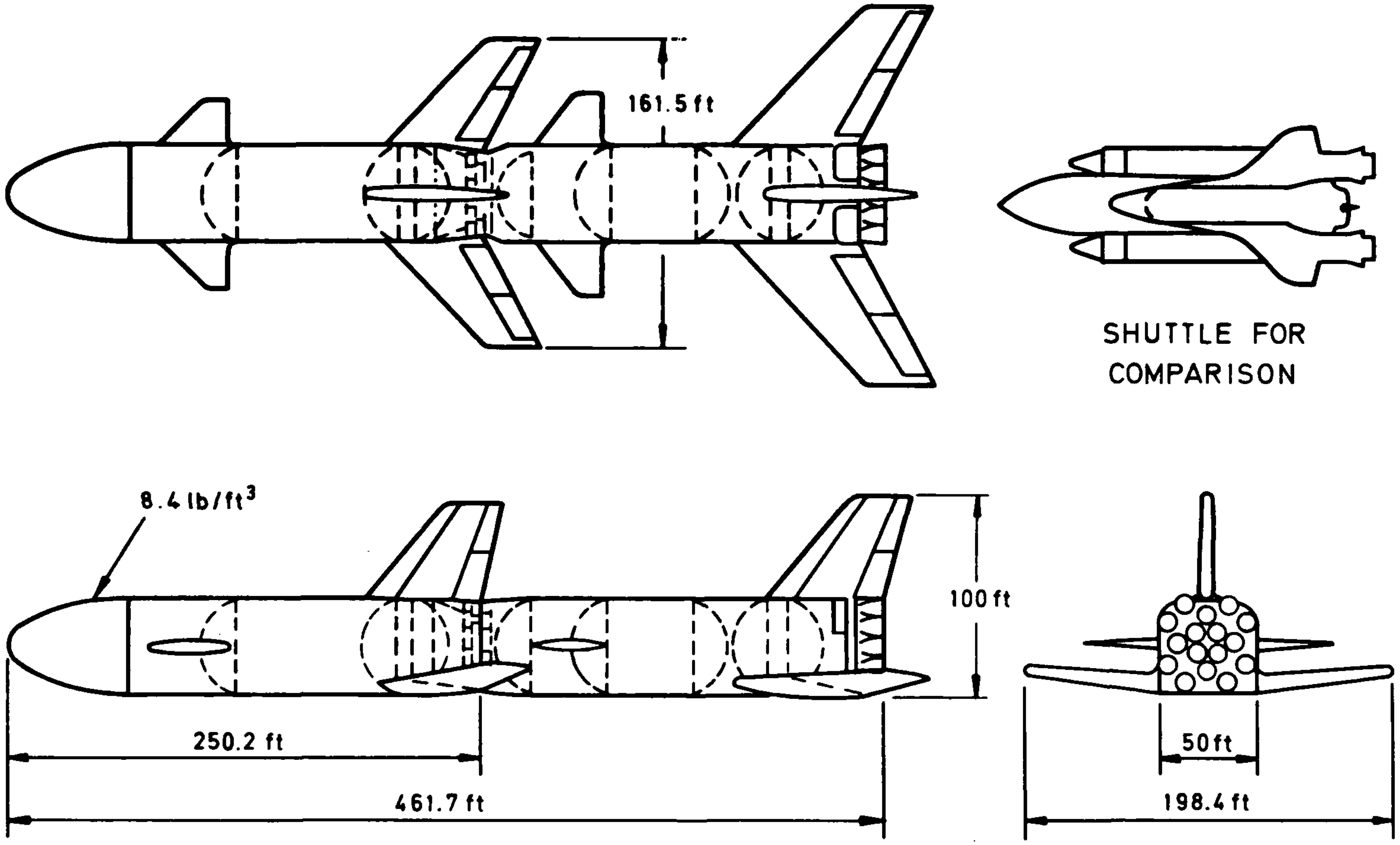
161.5 ft
SHUTTLE FOR COMPARISON
8.4 lb/ft^3
100 ft
250.2 ft
461.7 ft
50 ft
198.4 ft

Fig 21 Two-stage winged HLLV, with vertical take-off and horizontal landing. Space shuttle shown for comparison (M.W.J. Bell/Spaceflight – Ref 65)

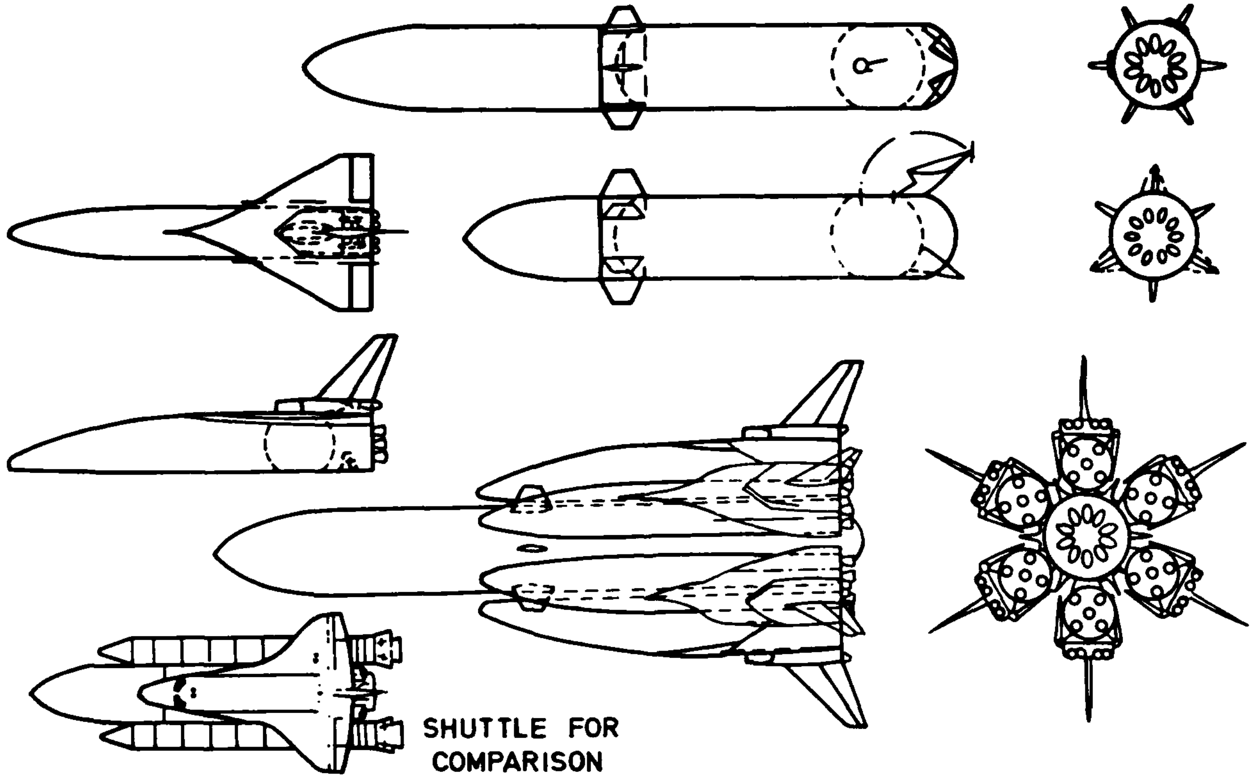
SHUTTLE FOR
COMPARISON

Fig 22 Rockwell parallel-burn, series-staged HLLV, with space shuttle for comparison (M.W.J. Bell/Spaceflight – Ref 65)

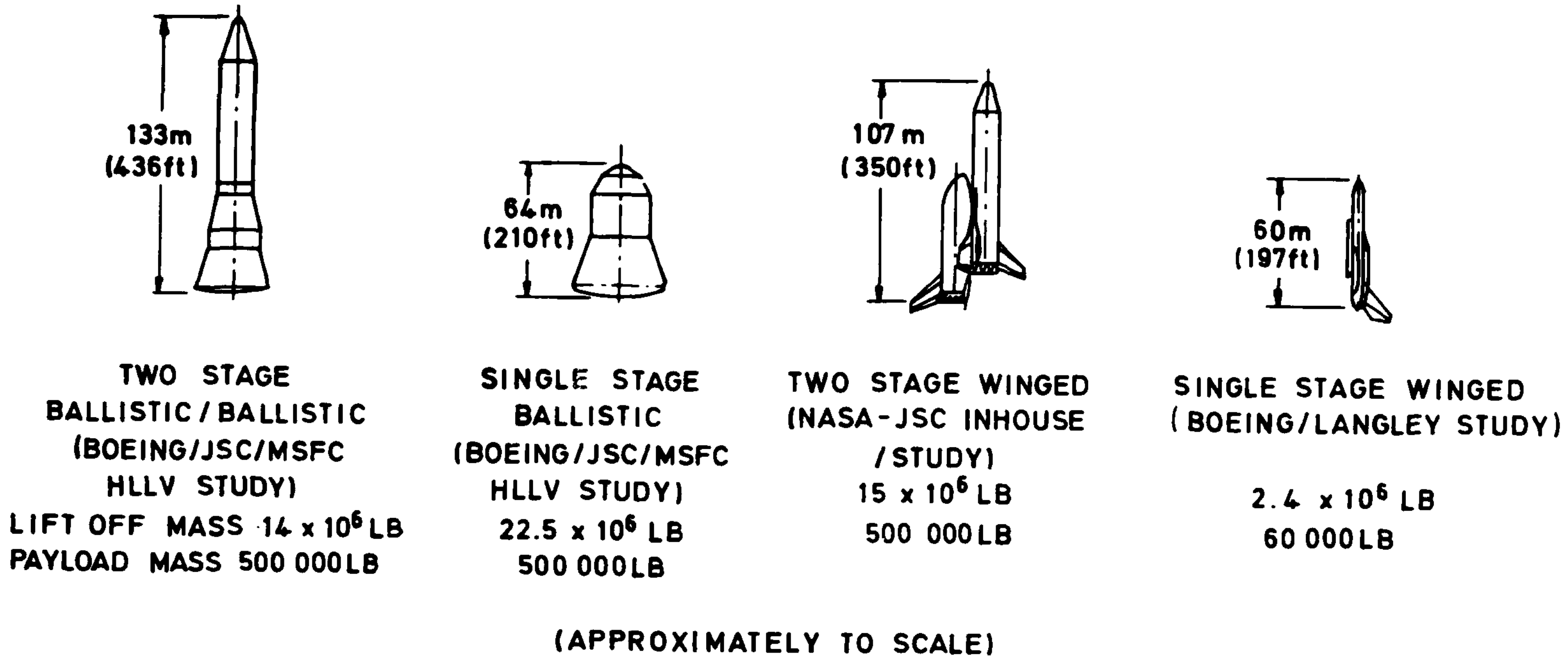
133m
(436ft)
64m
(210ft)
107m
(350ft)
60m
(197ft)
TWO STAGE
BALLISTIC / BALLISTIC
(BOEING/JSC/MSFC
HLLV STUDY)
LIFT OFF MASS 14 x 10⁶ LB
PAYLOAD MASS 500 000 LB
SINGLE STAGE
BALLISTIC
(BOEING/JSC/MSFC
HLLV STUDY)
22.5 x 10⁶ LB
500 000 LB
TWO STAGE WINGED
(NASA-JSC INHOUSE
/STUDY)
15 x 10⁶ LB
500 000 LB
SINGLE STAGE WINGED
(BOEING/LANGLEY STUDY)
2.4 x 10⁶ LB
60 000 LB
(APPROXIMATELY TO SCALE)

Fig 23 Typical vehicle concepts for low earth orbit freight delivery (Aerospace and Science – Ref 86)

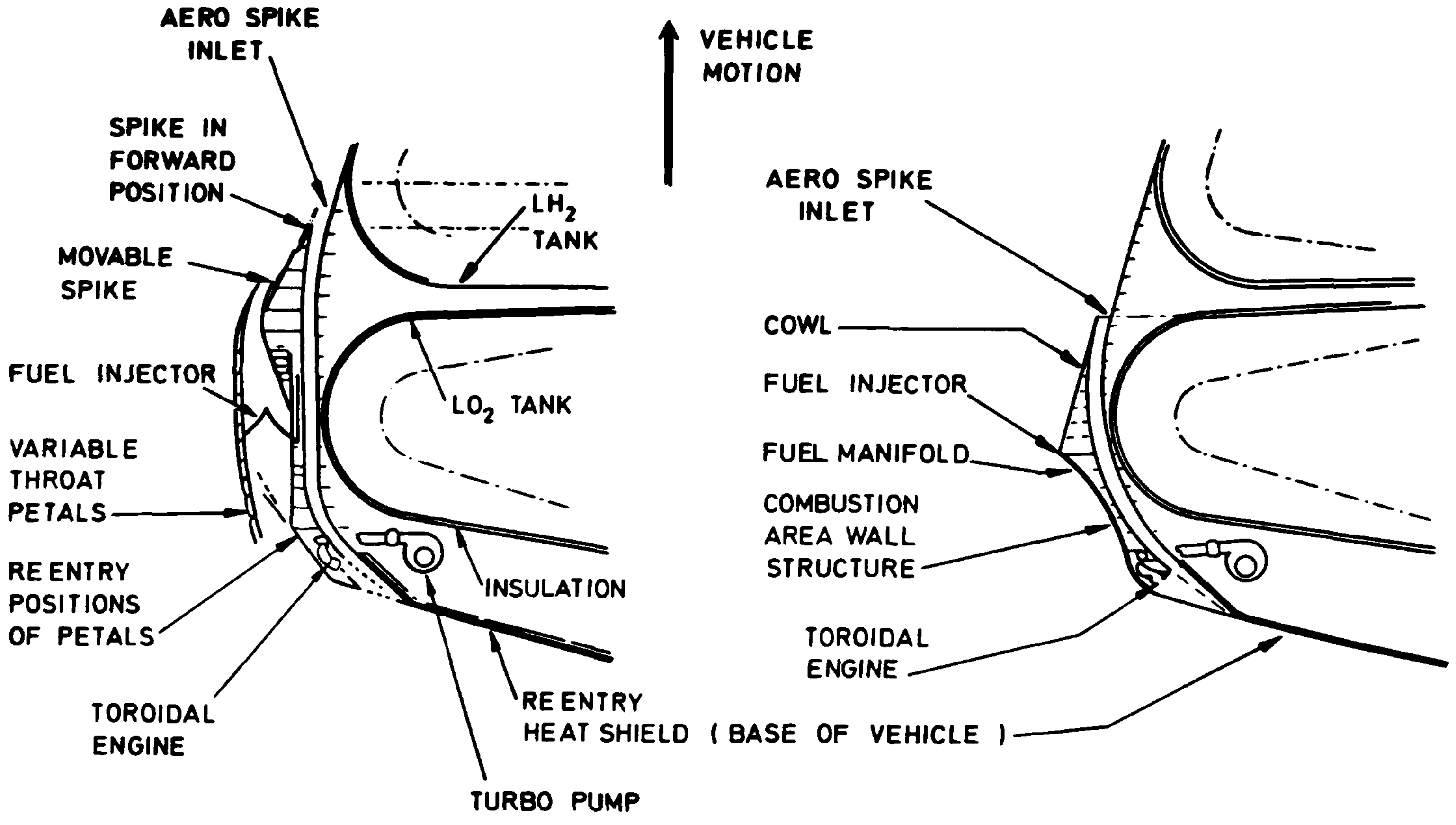
AERO SPIKE INLET
SPIKE IN FORWARD POSITION
MOVABLE SPIKE
FUEL INJECTOR
VARIABLE THROAT PETALS
RE ENTRY POSITIONS OF PETALS
TOROIDAL ENGINE
LH_2 TANK
LO_2 TANK
INSULATION
TURBO PUMP
RE ENTRY HEAT SHIELD (BASE OF VEHICLE)
VEHICLE MOTION
AERO SPIKE INLET
COWL
FUEL INJECTOR
FUEL MANIFOLD
COMBUSTION AREA WALL STRUCTURE
TOROIDAL ENGINE

Fig 24 North American Aviation concepts for air augmentation of rocket propulsion (M.W.J. Bell/Spaceflight – Ref 65)

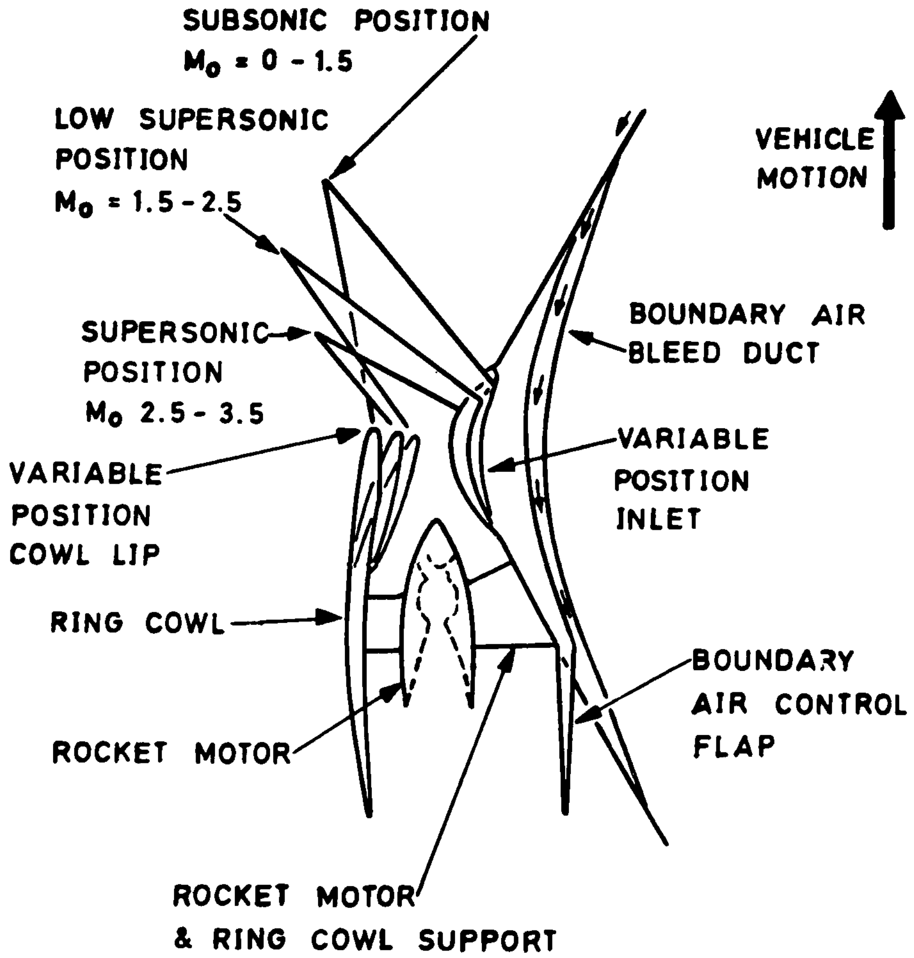
SUBSONIC POSITION
$M_0 = 0 - 1.5$
LOW SUPERSONIC POSITION
$M_0 = 1.5 - 2.5$
SUPERSONIC POSITION
M_0 2.5 - 3.5
VARIABLE POSITION COWL LIP
RING COWL
ROCKET MOTOR
ROCKET MOTOR & RING COWL SUPPORT
VEHICLE MOTION
BOUNDARY AIR BLEED DUCT
VARIABLE POSITION INLET
BOUNDARY AIR CONTROL FLAP

Fig 25 Rockwell concept for air augmentation of rocket propulsion (M.W.J. Bell/Spaceflight – Ref 65)

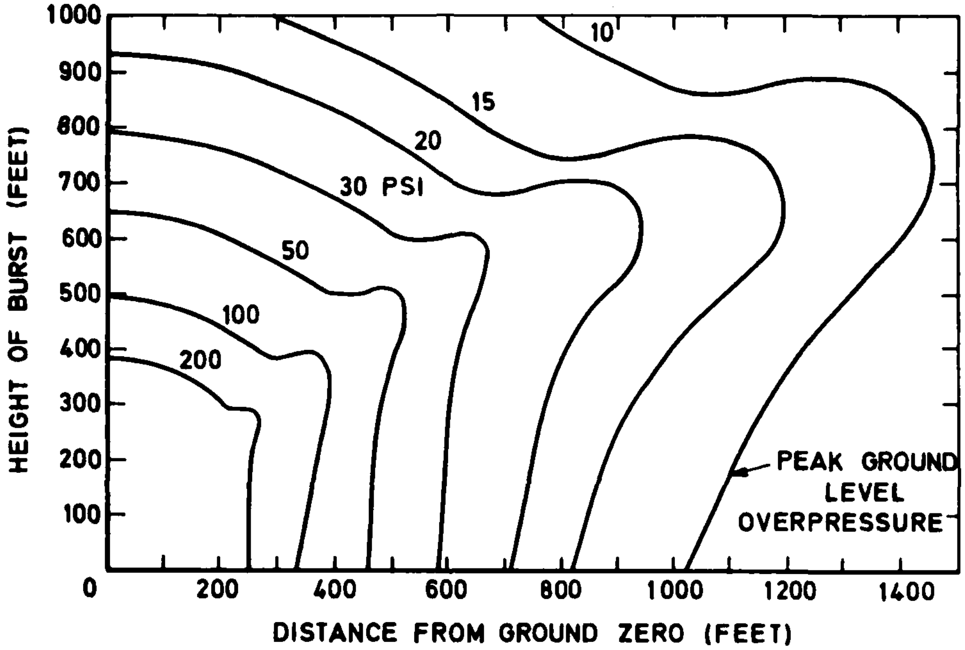

Fig 26 Peak overpressures on the ground for a 1 kiloton burst (high-pressure range) (US Atomic Energy Commission – Ref 95)

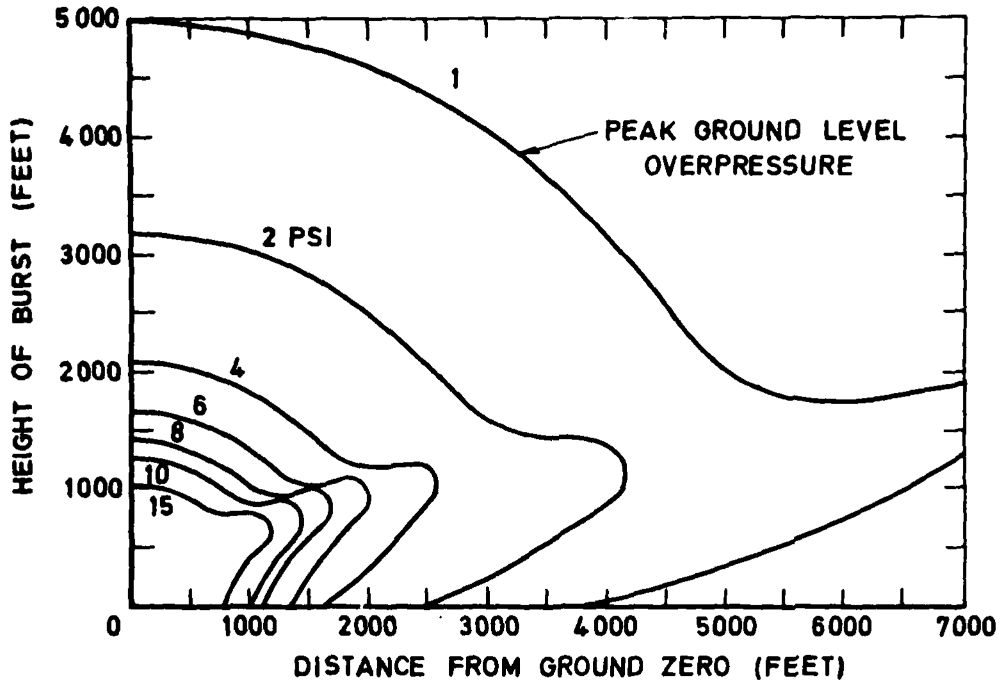

Fig 27 **Peak overpressures on the ground for 1 kiloton burst (low-pressure range) (US Atomic Energy Commission – Ref 95)**

TR 80034

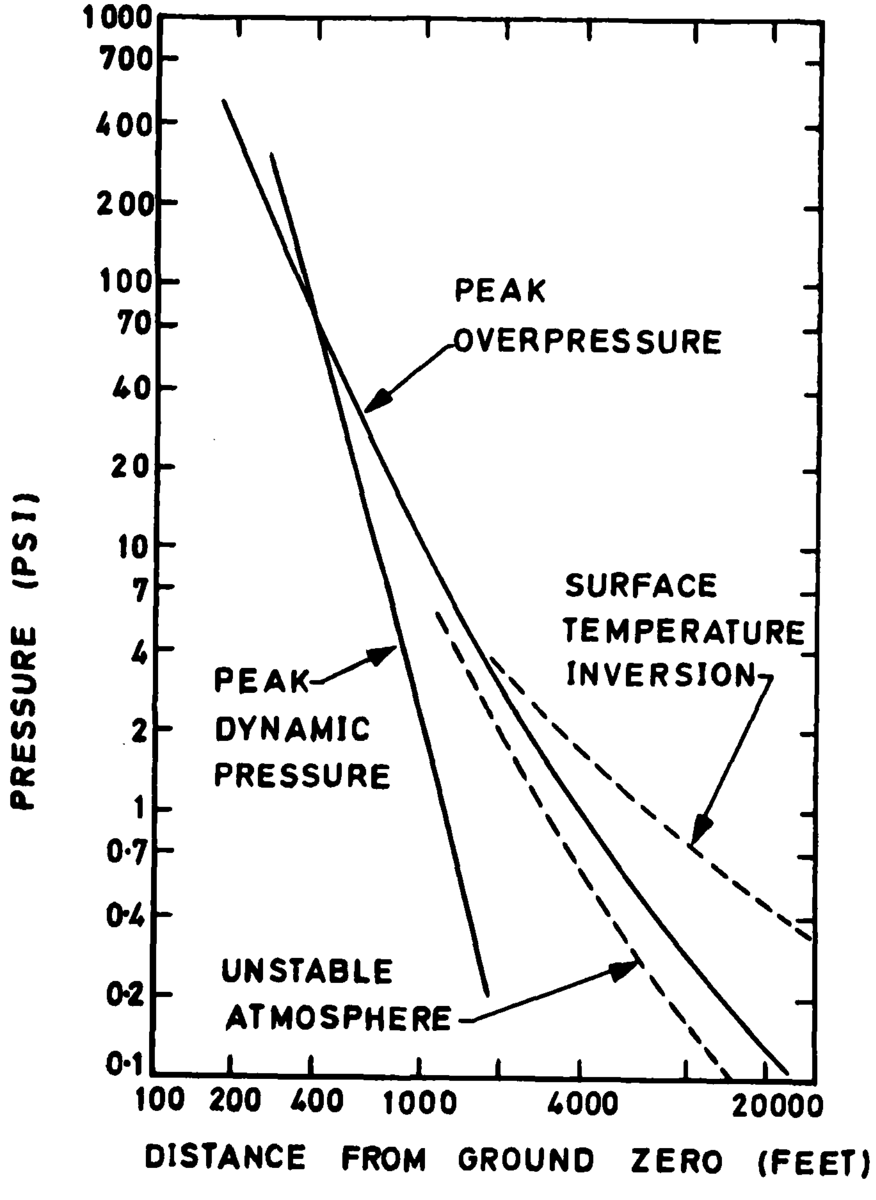

Fig 28 Peak overpressure and peak dynamic pressure for 1 kiloton surface burst (US Atomic Energy Commission – Ref 95)

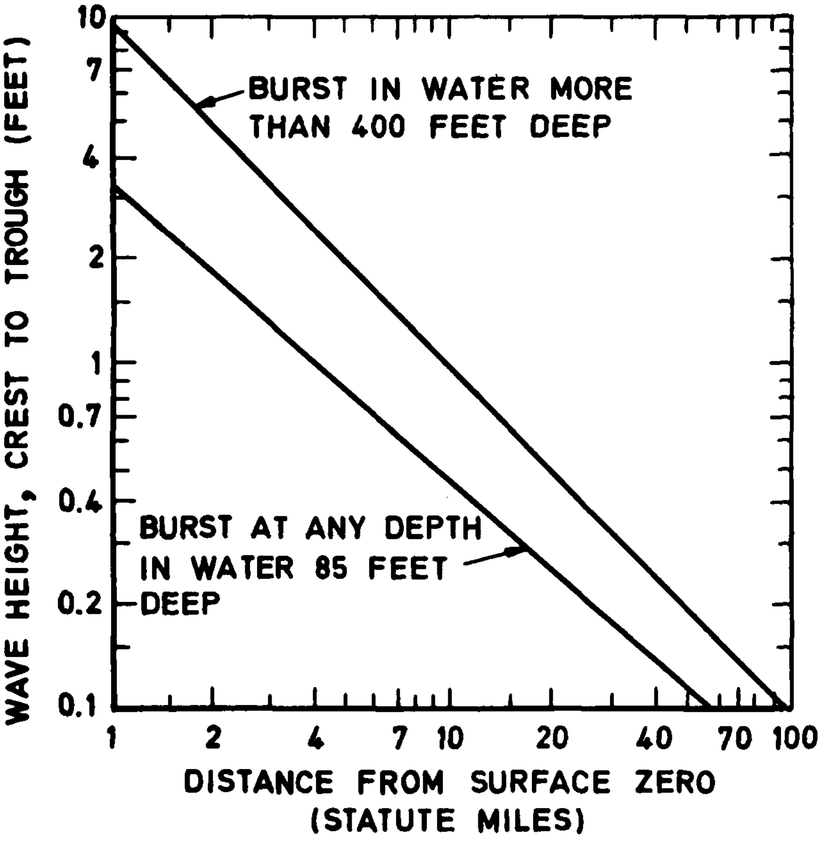

Fig 29 Maximum wave height in different types of 1 kiloton underwater bursts (US Atomic Energy Commission – Ref 95)

TR 80034

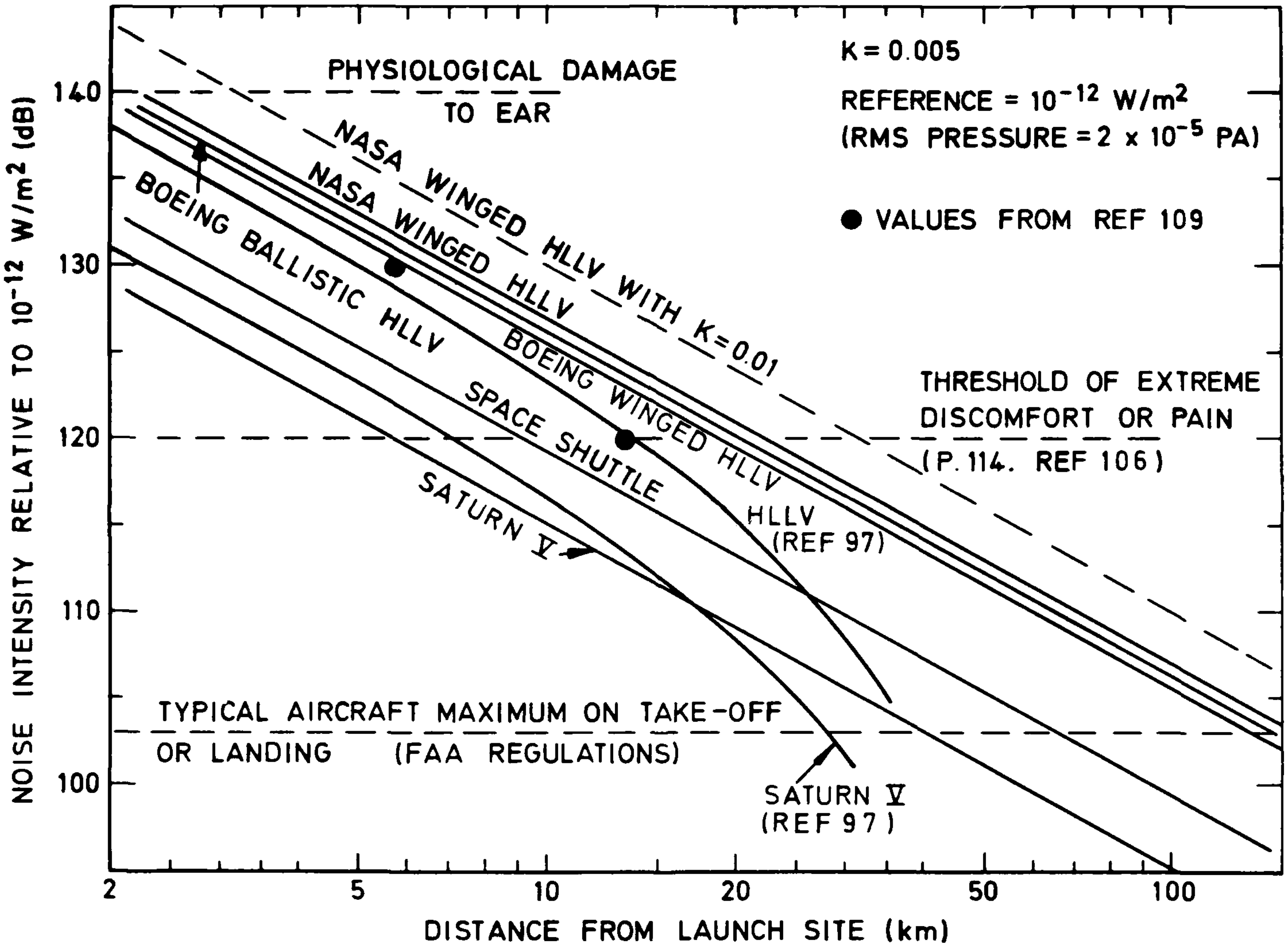

Fig 30 HLLV noise intensity as a function of distance from launch site for a ground-based observer

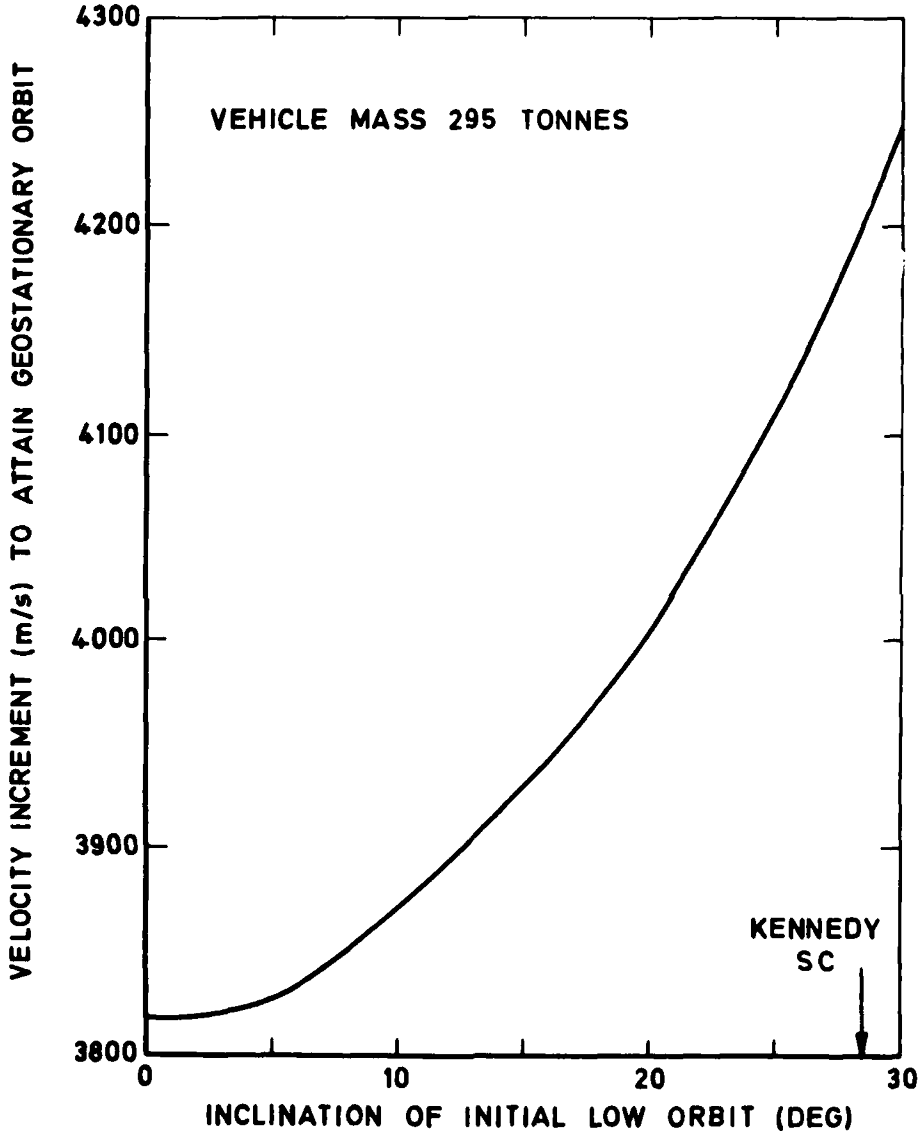

Fig 31 Velocity increment required to transfer from low orbit to geostationary orbit for different initial inclinations (W.J. Graff and C.J. Huang – Ref 71)

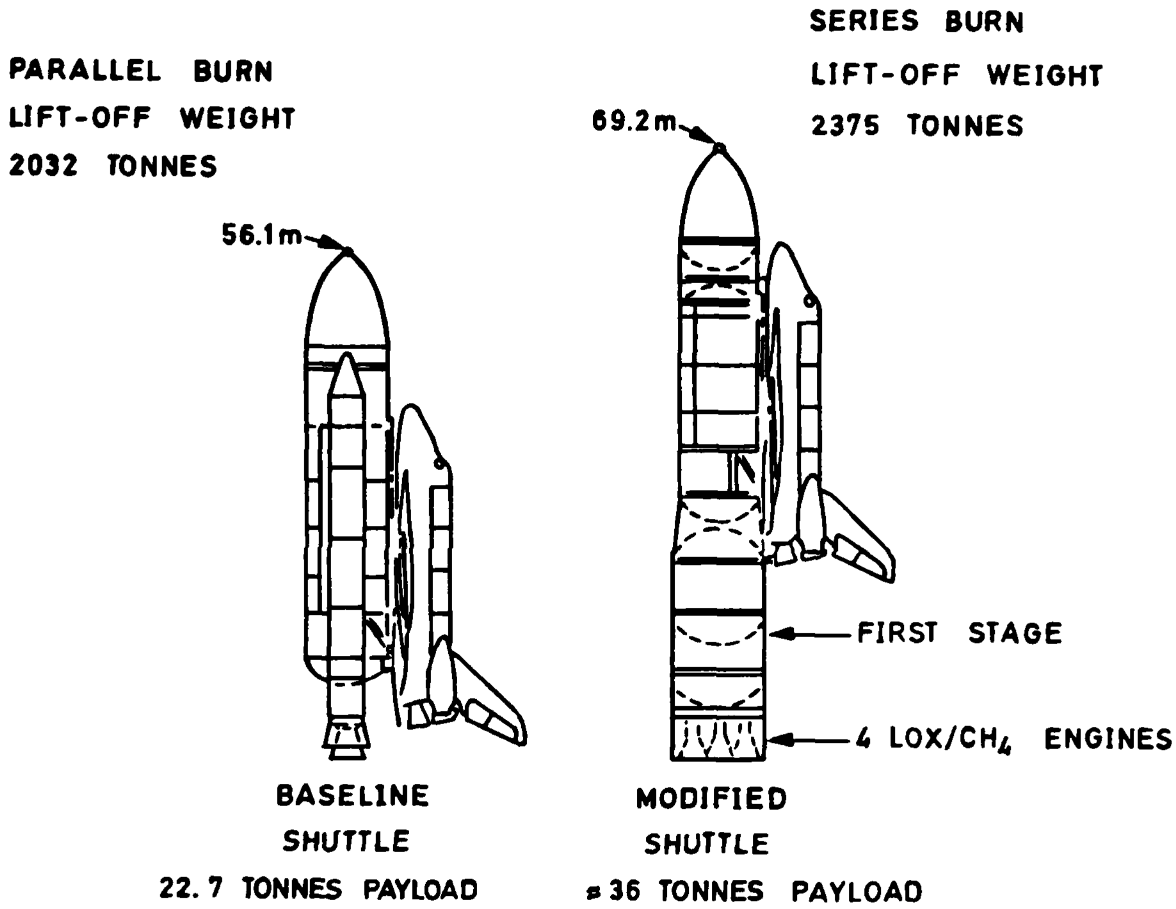
PARALLEL BURN
LIFT-OFF WEIGHT
2032 TONNES
56.1m
SERIES BURN
LIFT-OFF WEIGHT
2375 TONNES
69.2m
FIRST STAGE
4 LOX/CH_4 ENGINES
BASELINE
SHUTTLE
22.7 TONNES PAYLOAD
MODIFIED
SHUTTLE
≈ 36 TONNES PAYLOAD

Fig 32 Personnel launch vehicle (PLV) modified shuttle with liquid rocket booster (R.O. Piland – Ref 33)

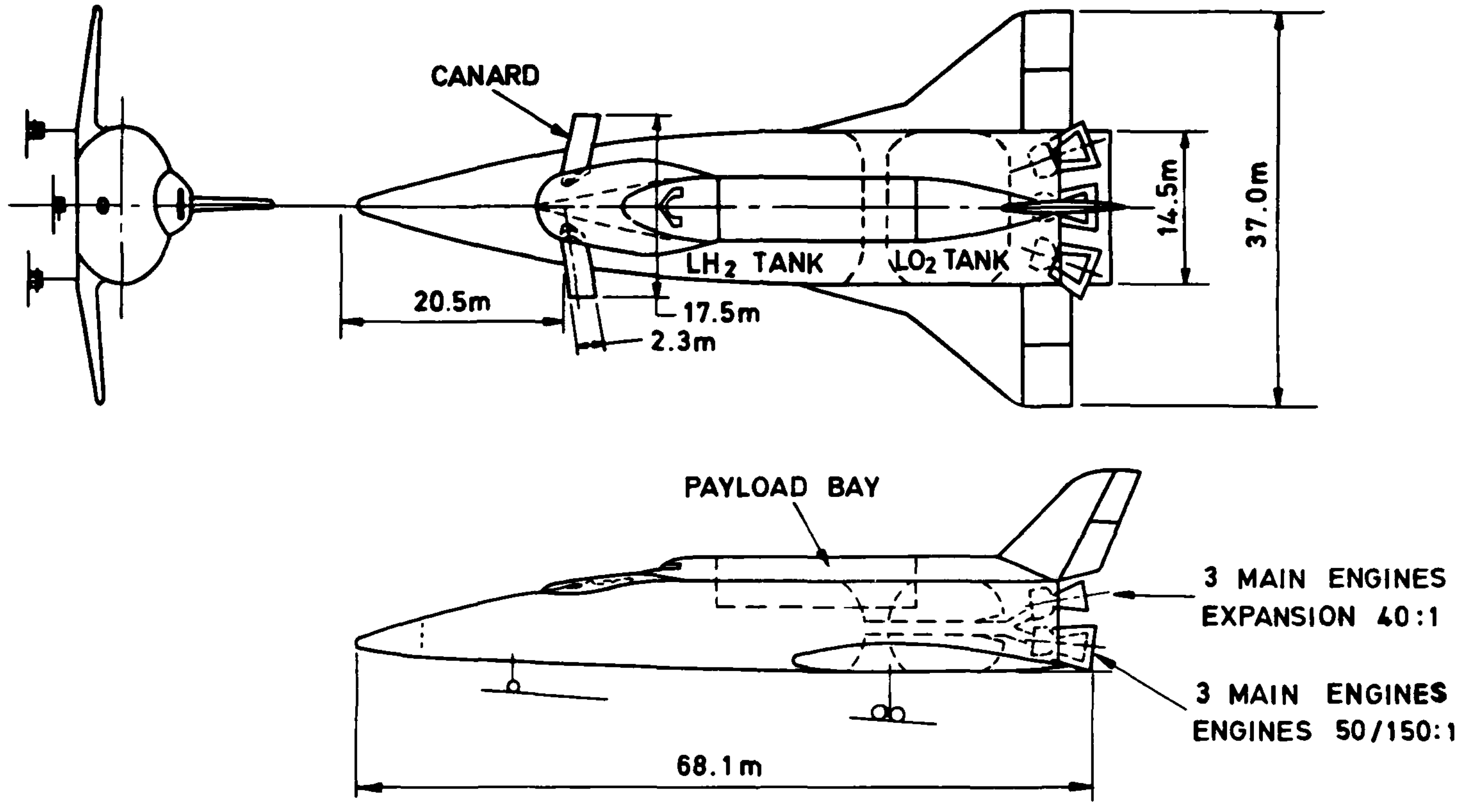
CANARD
LH$_2$ TANK
LO$_2$ TANK
14.5m
37.0m
20.5m
17.5m
2.3m
PAYLOAD BAY
3 MAIN ENGINES
EXPANSION 40:1
3 MAIN ENGINES
ENGINES 50/150:1
68.1m

Fig 33 Advanced, control-configured single-stage-to-orbit launch vehicle (Boeing – Ref 113)

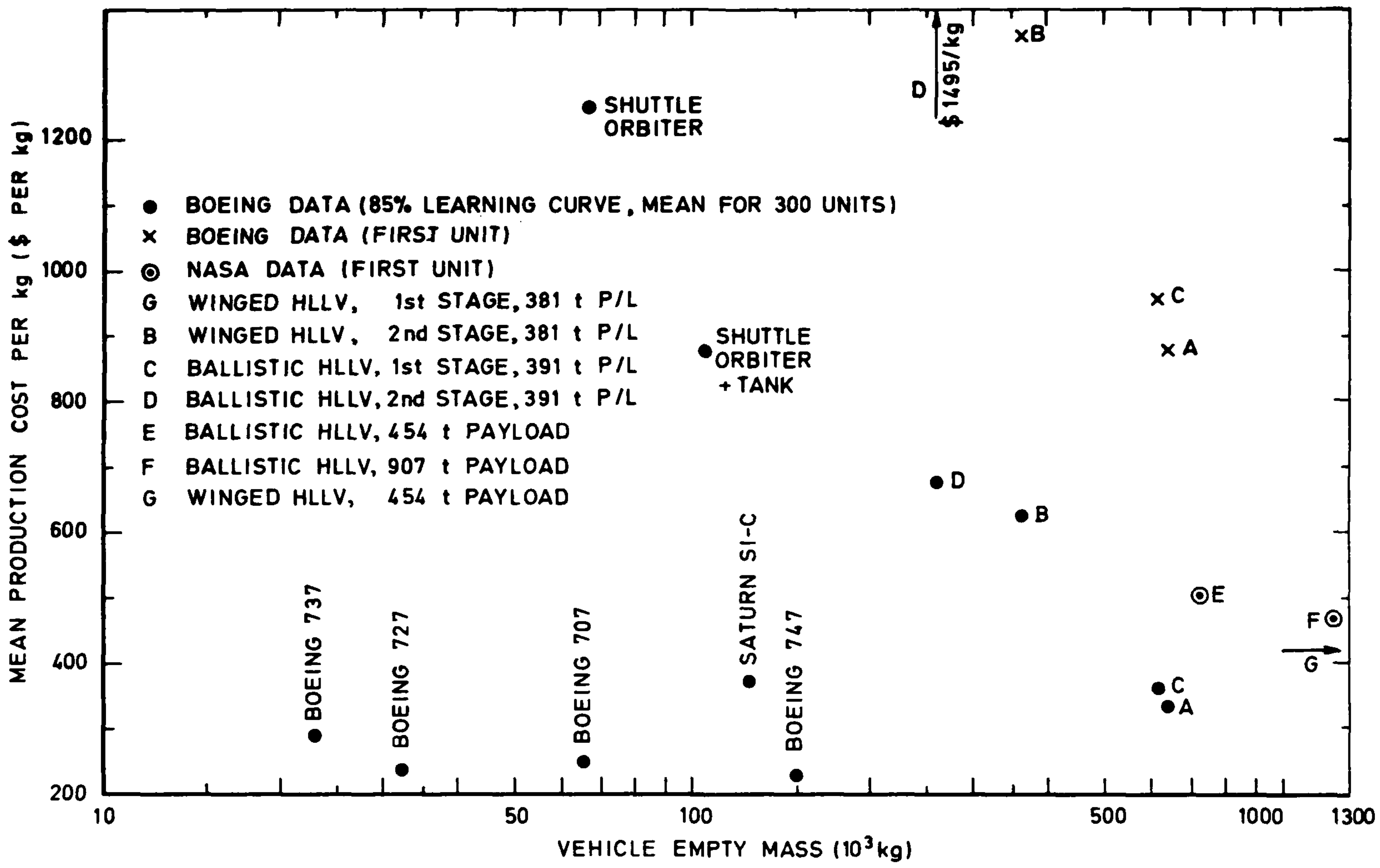

Fig 34 HLLV procurement costs in $ US per kg of empty weight compared to the costs of other aerospace vehicles (Data from Refs 7, 71)

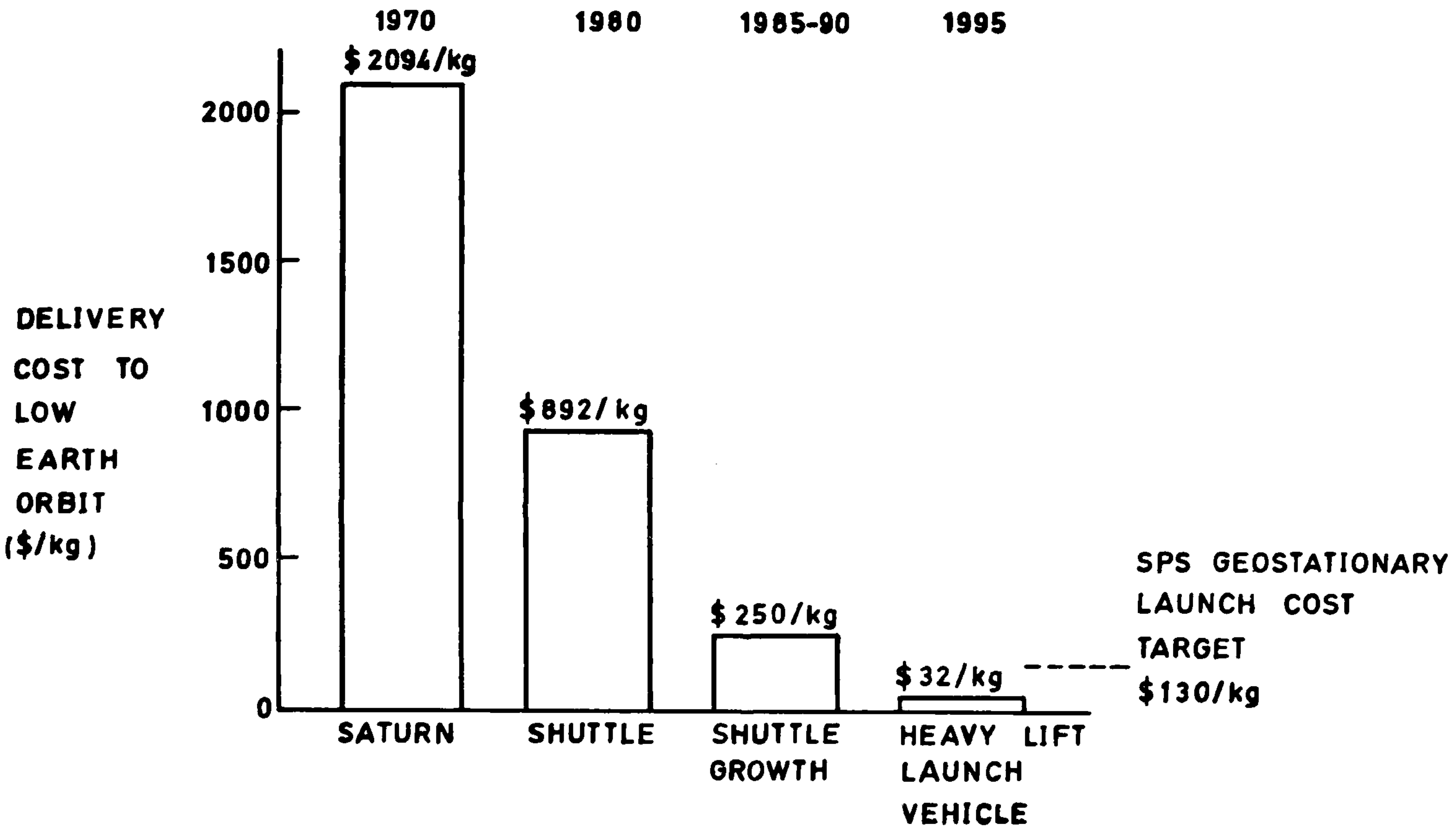

Fig 35 HLLV operational costs compared to earlier launchers (Grumman – Ref 9)

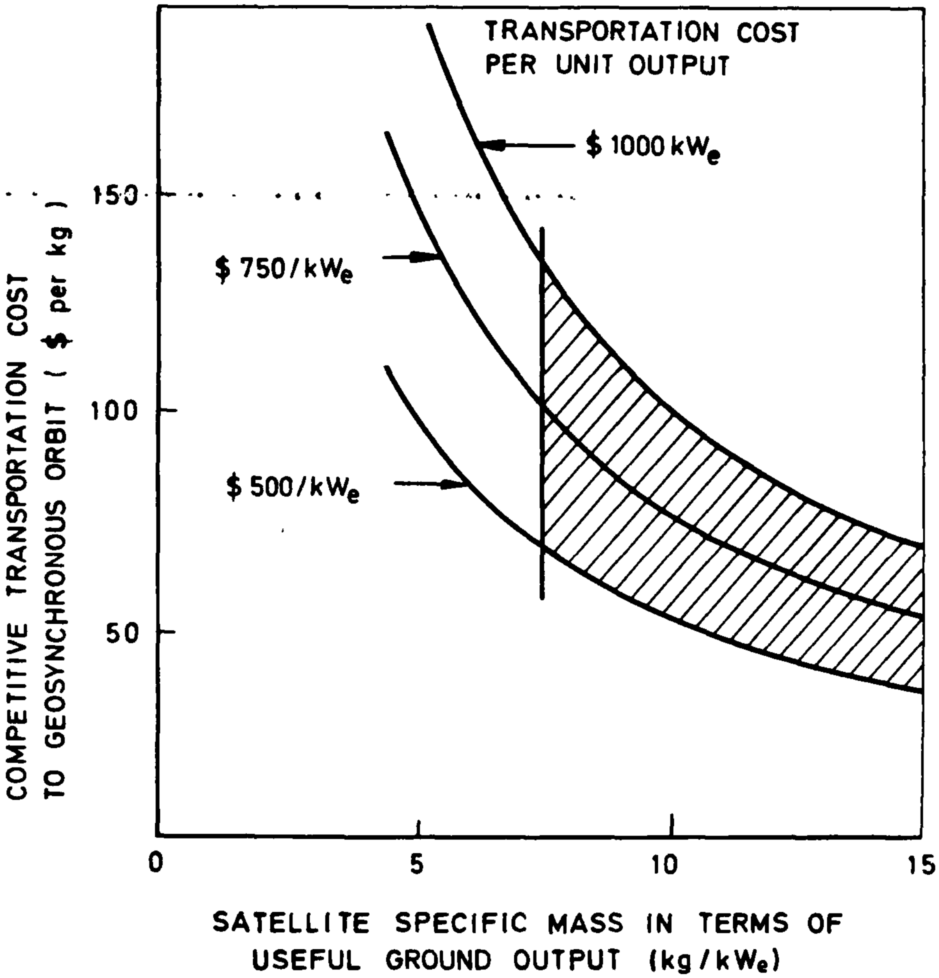

Fig 36 Estimate of competitive range for transportation cost based on alternative (non-solar) energy sources (Aerospace and Science – Ref 86)

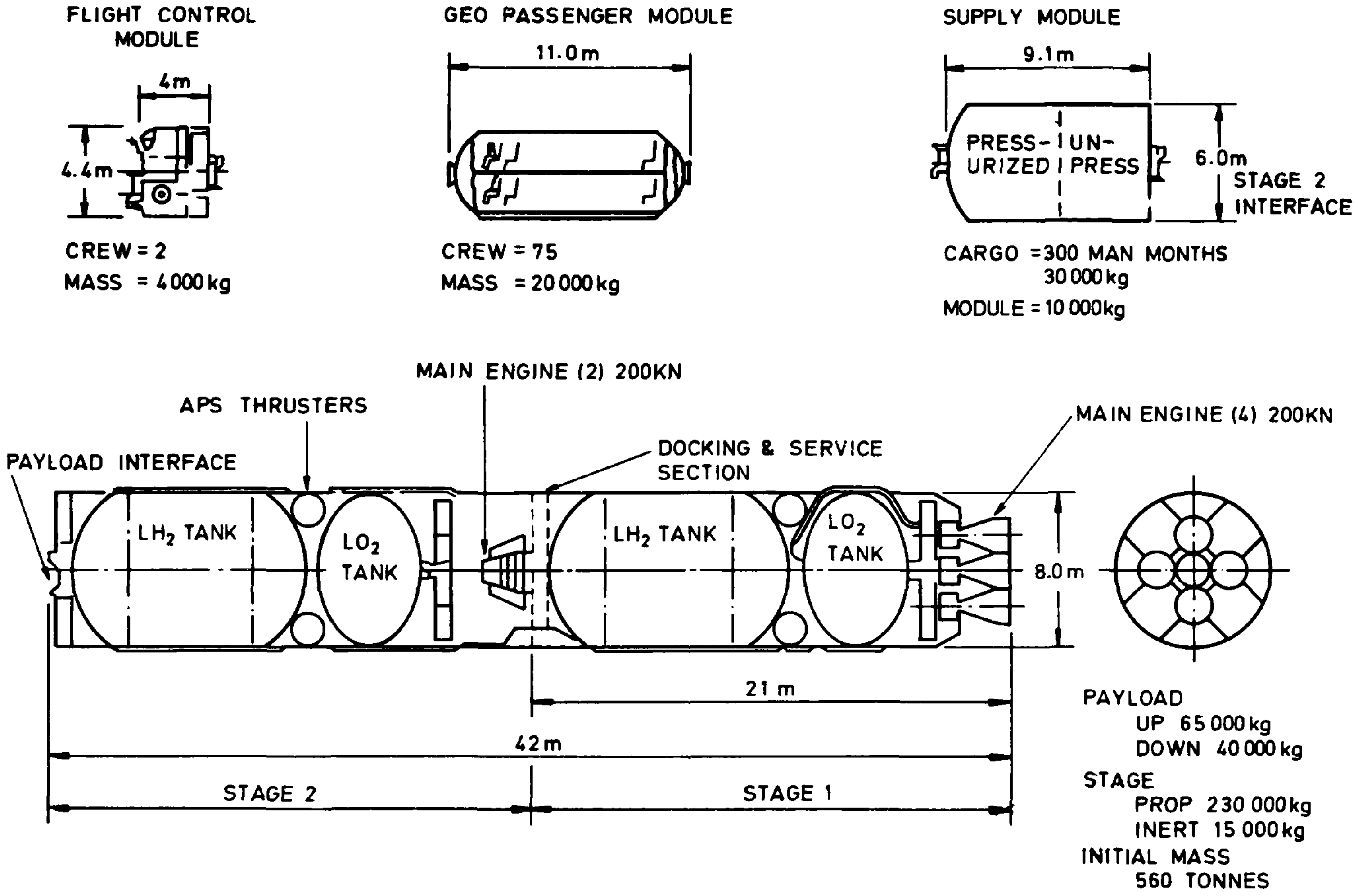
FLIGHT CONTROL MODULE
4m
4.4m
CREW = 2
MASS = 4000 kg
GEO PASSENGER MODULE
11.0 m
CREW = 75
MASS = 20 000 kg
SUPPLY MODULE
9.1 m
PRESS-URIZED
UN-PRESS
6.0m
STAGE 2 INTERFACE
CARGO = 300 MAN MONTHS
30 000 kg
MODULE = 10 000 kg
MAIN ENGINE (2) 200KN
APS THRUSTERS
PAYLOAD INTERFACE
DOCKING & SERVICE SECTION
MAIN ENGINE (4) 200KN
LH$_2$ TANK
LO$_2$ TANK
LH$_2$ TANK
LO$_2$ TANK
8.0 m
21 m
42 m
STAGE 2
STAGE 1
PAYLOAD
UP 65 000 kg
DOWN 40 000 kg
STAGE
PROP 230 000 kg
INERT 15 000 kg
INITIAL MASS
560 TONNES

Fig 37 Chemically propelled orbital transfer vehicle, indicating configurations of passenger and cargo modules (Boeing – Ref 11)

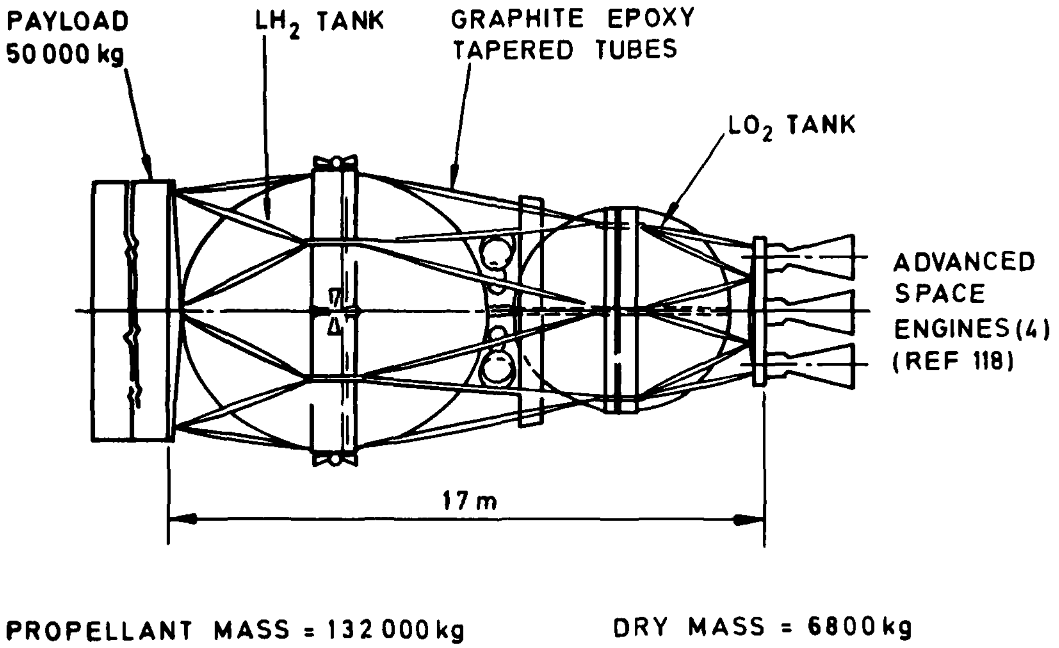
PAYLOAD
50 000 kg
LH_2 TANK
GRAPHITE EPOXY
TAPERED TUBES
LO_2 TANK
ADVANCED
SPACE
ENGINES (4)
(REF 118)
17 m
PROPELLANT MASS = 132 000 kg
DRY MASS = 6800 kg

Fig 38 Schematic of advanced, chemically-propelled orbit transfer vehicle for carrying cargo (NASA – Ref 118)

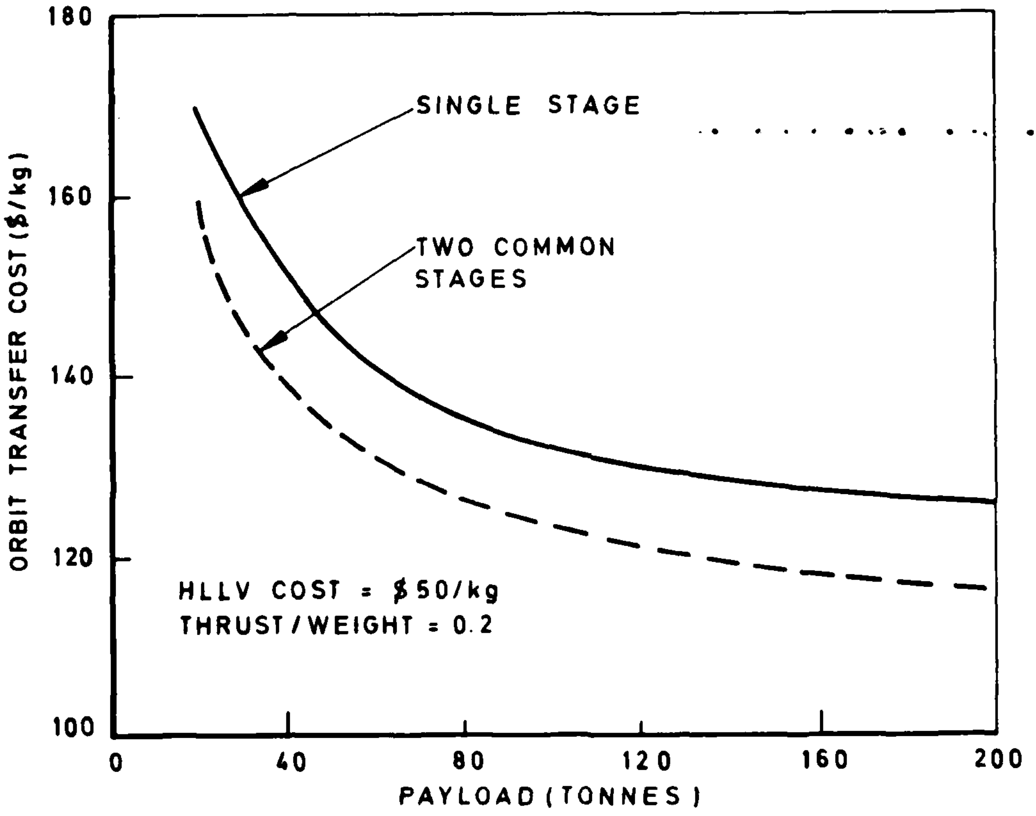

Fig 39 Effect of payload capacity on chemically-propelled orbit transfer cost (NASA – Ref 118)

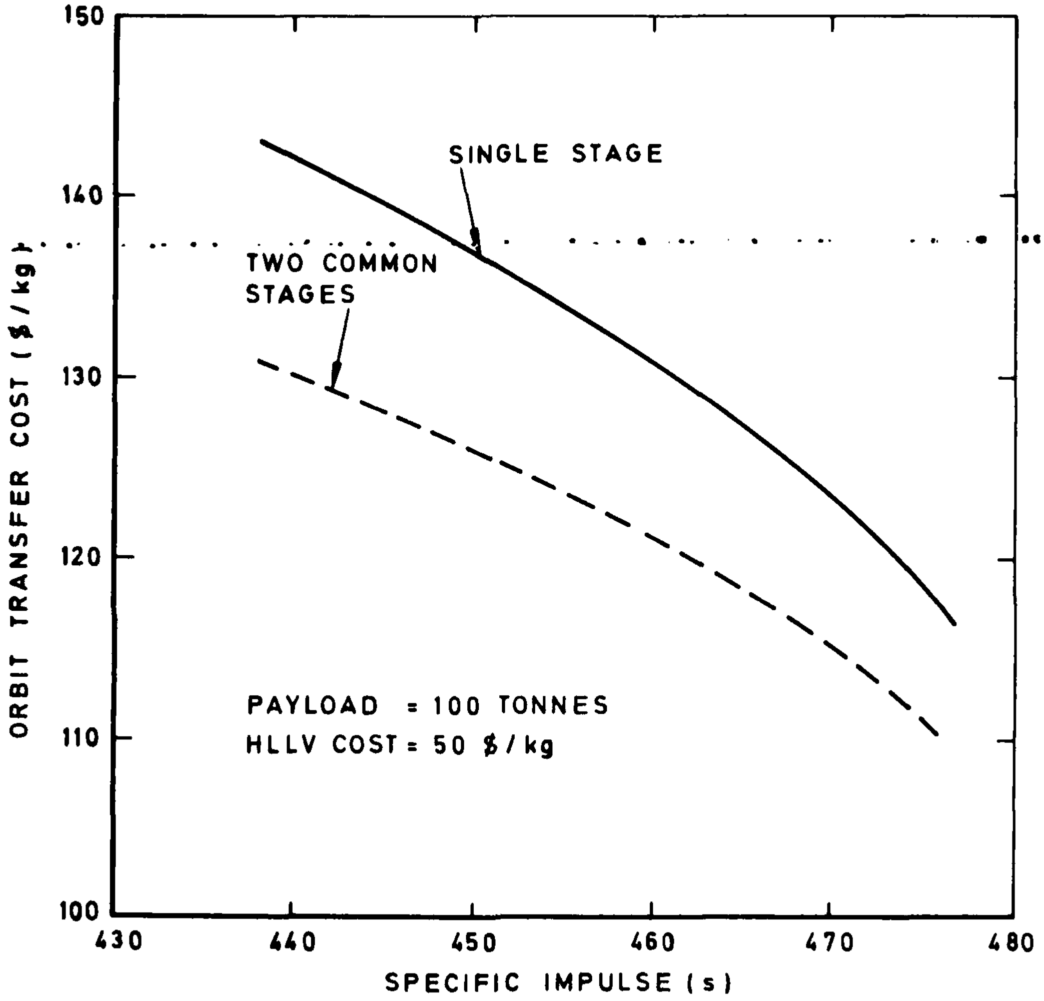

Fig 40 Effect of engine specific impulse on chemically-propelled orbit transfer cost (NASA – Ref 118)

FROM REF 123 :-

A – SELF- POWER (ION)

B – SELF POWER (MPD)

C – NUCLEAR ELECTRIC (MPD)

D – GAS CORE REACTOR

E – CHEMICAL

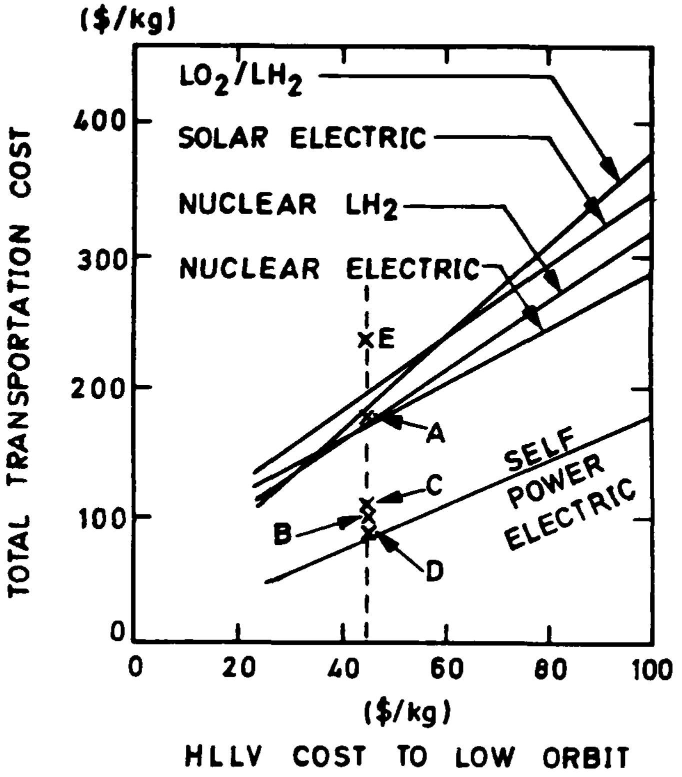

Fig 41 Transportation cost to geostationary orbit as a function of HLLV cost (NASA – Ref 200)

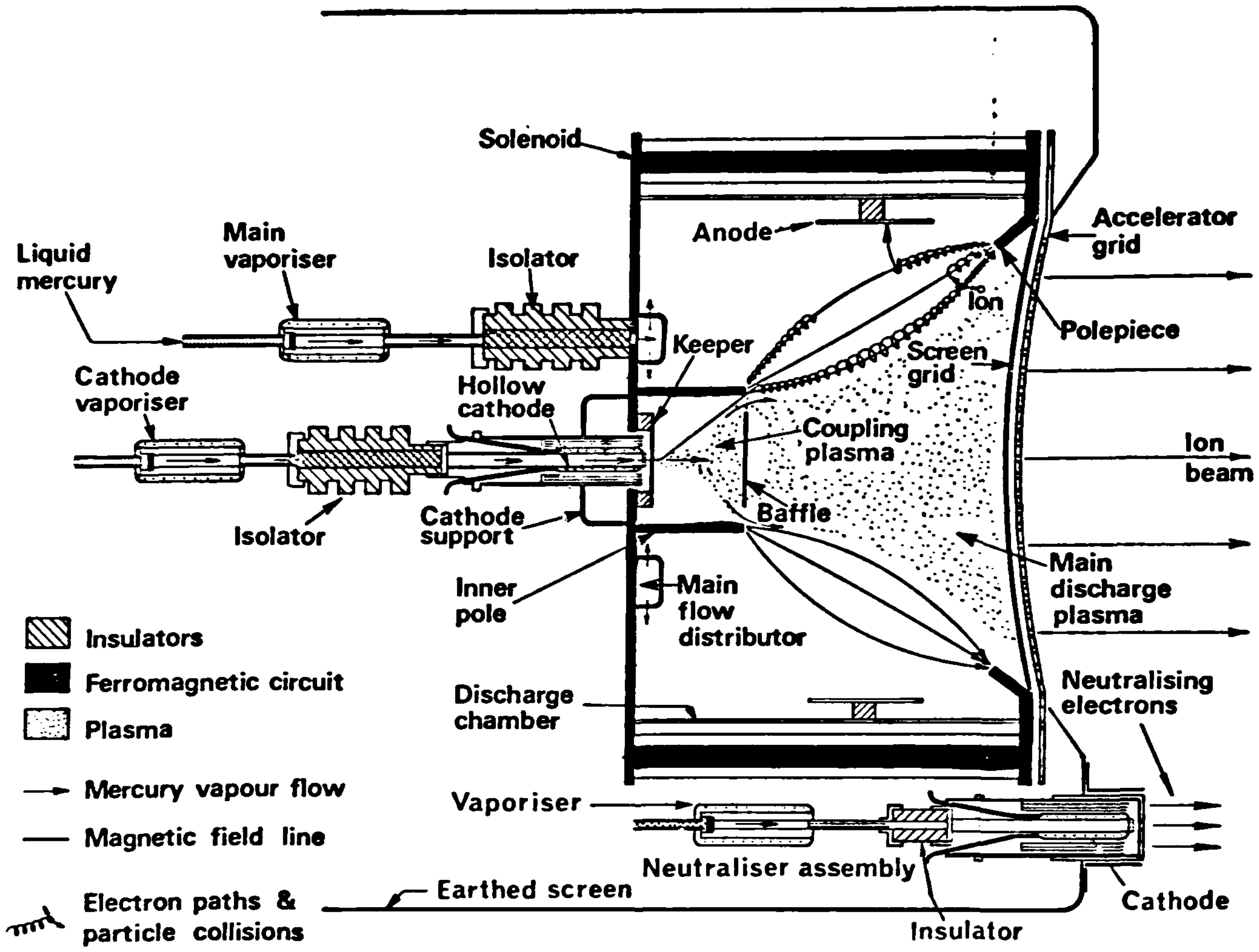
Solenoid
Liquid mercury
Main vaporiser
Isolator
Anode
Accelerator grid
Ion
Polepiece
Keeper
Screen grid
Cathode vaporiser
Hollow cathode
Coupling plasma
Ion beam
Isolator
Cathode support
Baffle
Main discharge plasma
Inner pole
Main flow distributor
Insulators
Ferromagnetic circuit
Plasma
Discharge chamber
Neutralising electrons
Mercury vapour flow
Magnetic field line
Vaporiser
Neutraliser assembly
Electron paths & particle collisions
Earthed screen
Cathode
Insulator

Fig 42 Schematic of Kaufman ion thruster, using mercury propellant (to use argon, flow control valves would replace the vaporisers)

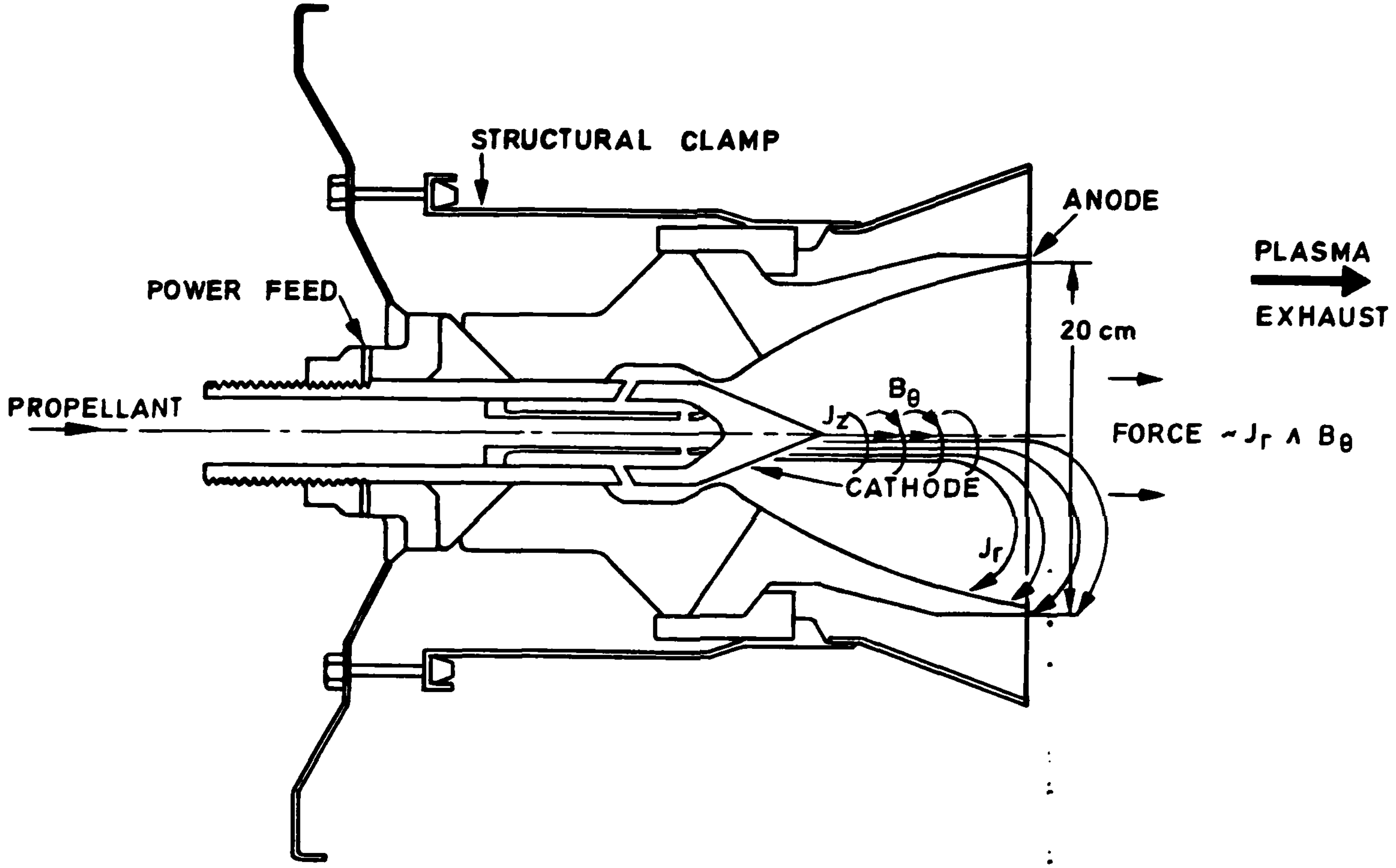
STRUCTURAL CLAMP
ANODE
PLASMA
EXHAUST
POWER FEED
20 cm
PROPELLANT
B_θ
J_z
FORCE $\sim J_r \wedge B_\theta$
CATHODE
J_r

Fig 43 20cm MPD thruster concept (D. Grim/Boeing – Ref 115).

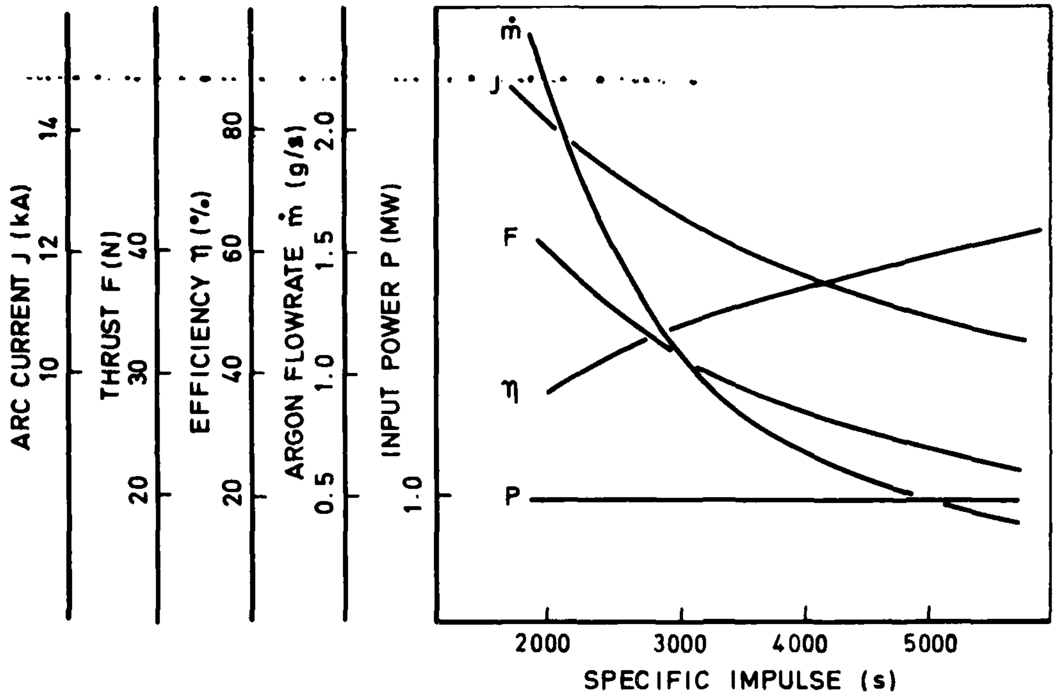

Fig 44 20cm MPD performance prediction (D. Grim/Boeing – Ref 115)

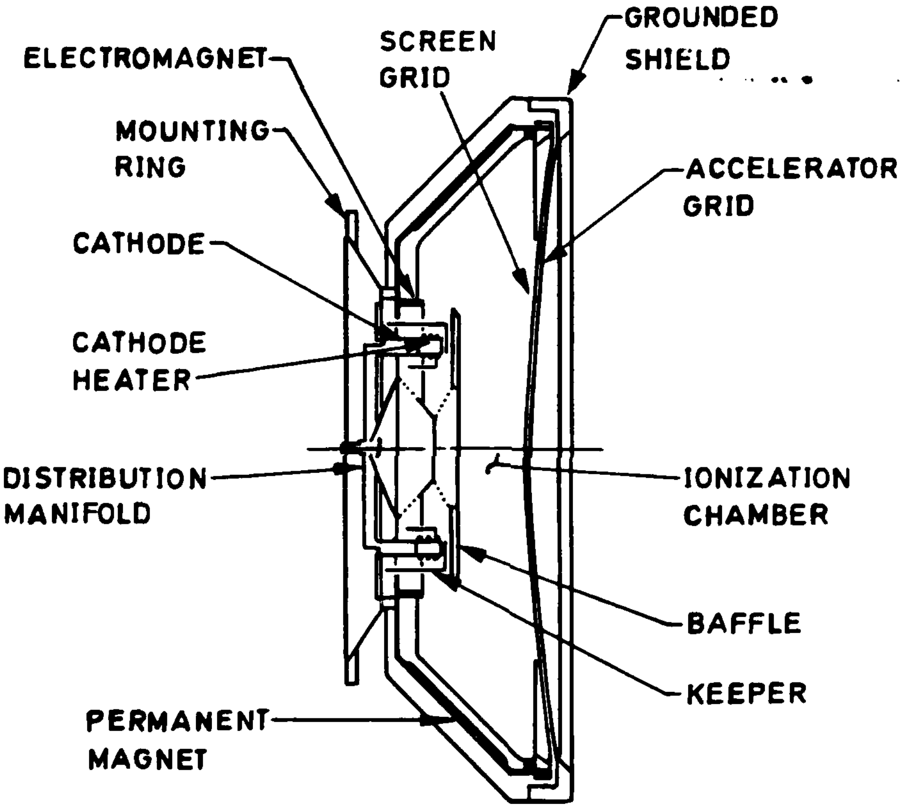
ELECTROMAGNET
SCREEN GRID
GROUNDED SHIELD
MOUNTING RING
ACCELERATOR GRID
CATHODE
CATHODE HEATER
DISTRIBUTION MANIFOLD
IONIZATION CHAMBER
BAFFLE
KEEPER
PERMANENT MAGNET

Fig 45 Schematic of 120cm argon ion thruster (D. Grim/Boeing – Ref 115)

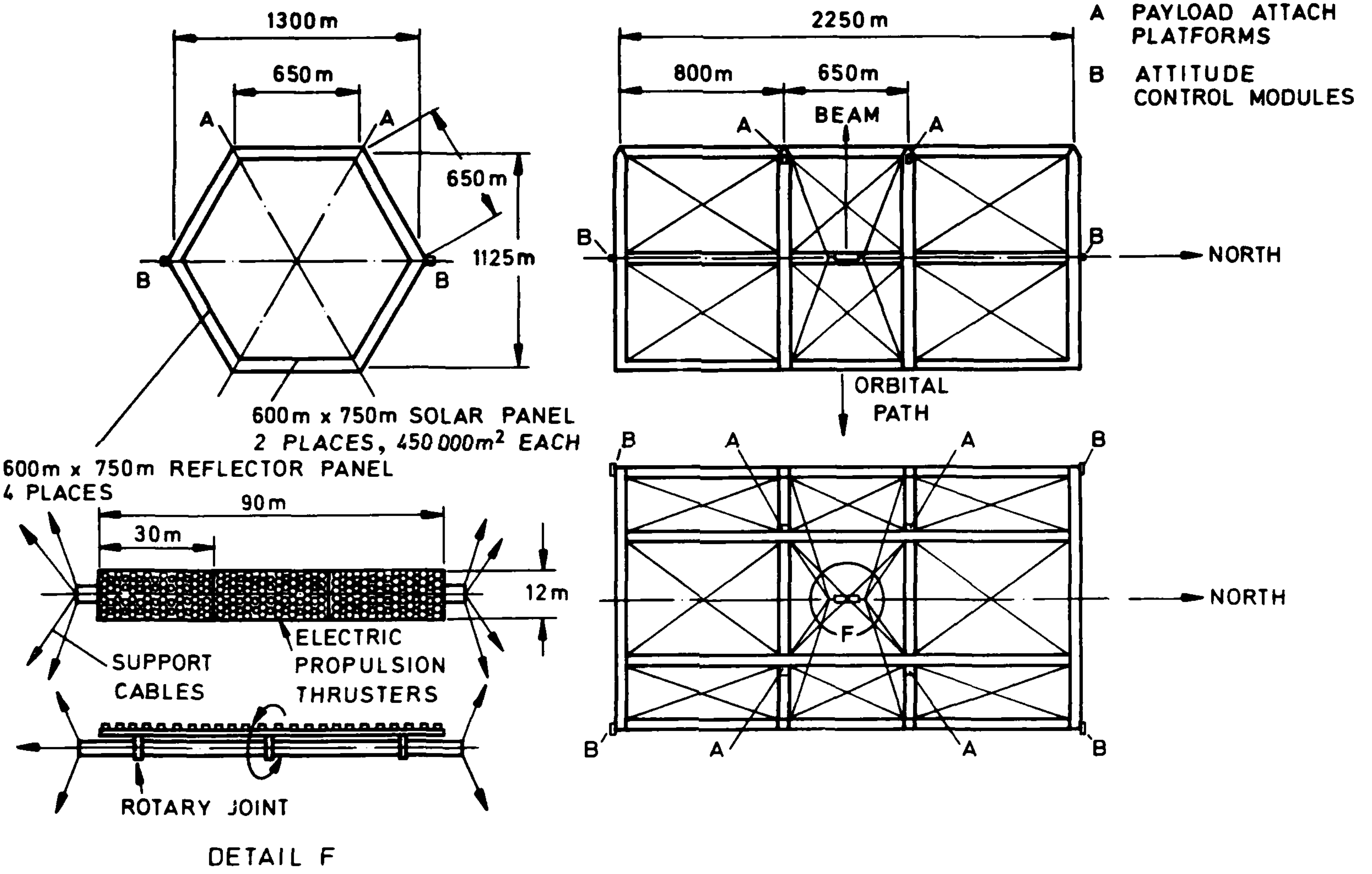
1300m
650m
A
A
650m
1125m
B
B
600m x 750m SOLAR PANEL
2 PLACES, 450 000m^2 EACH
600m x 750m REFLECTOR PANEL
4 PLACES
90m
30m
12m
SUPPORT
CABLES
ELECTRIC
PROPULSION
THRUSTERS
ROTARY JOINT
DETAIL F
2250m
800m
650m
BEAM
A
A
B
B
NORTH
ORBITAL
PATH
B
A
A
B
F
NORTH
B
A
A
B
A PAYLOAD ATTACH PLATFORMS
B ATTITUDE CONTROL MODULES

Fig 46 Autonomous electrically-propelled orbital transfer vehicle (Rockwell – Ref 159)

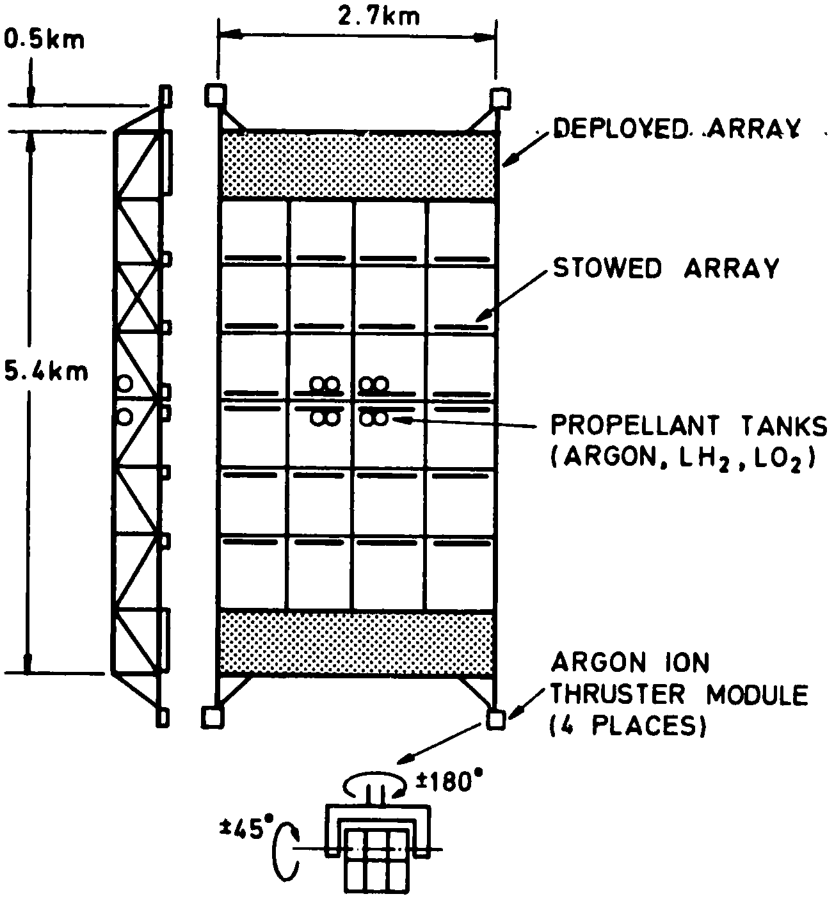
0.5km
2.7km
5.4km
DEPLOYED ARRAY
STOWED ARRAY
PROPELLANT TANKS
(ARGON, LH2, LO2)
ARGON ION
THRUSTER MODULE
(4 PLACES)
±180°
±45°

Fig 47 Boeing concept for transporting sections of a 10GW SPS to geostationary orbit (R.O. Piland – Ref 33)

TR 80034

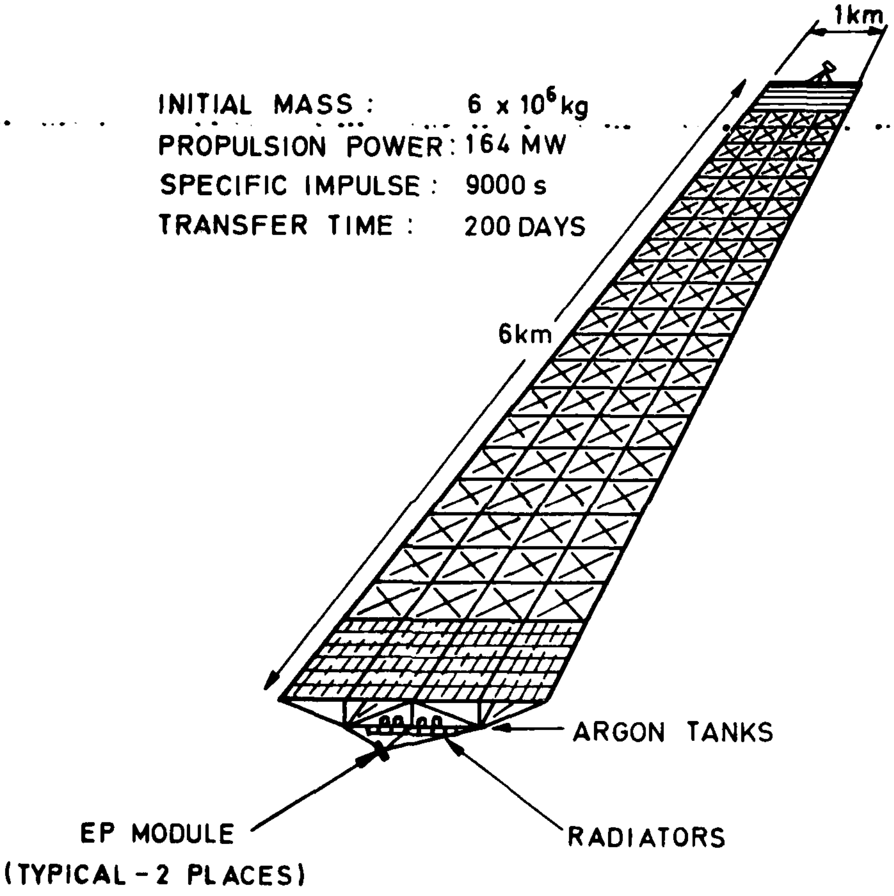
1km
INITIAL MASS : 6 x 10^6 kg
PROPULSION POWER : 164 MW
SPECIFIC IMPULSE : 9000 s
TRANSFER TIME : 200 DAYS
6km
ARGON TANKS
EP MODULE
(TYPICAL - 2 PLACES)
RADIATORS

Fig 48 1GW SPS section with arrays of argon ion thrusters for the orbit transfer mission (D. Grim/Boeing – Ref 115)

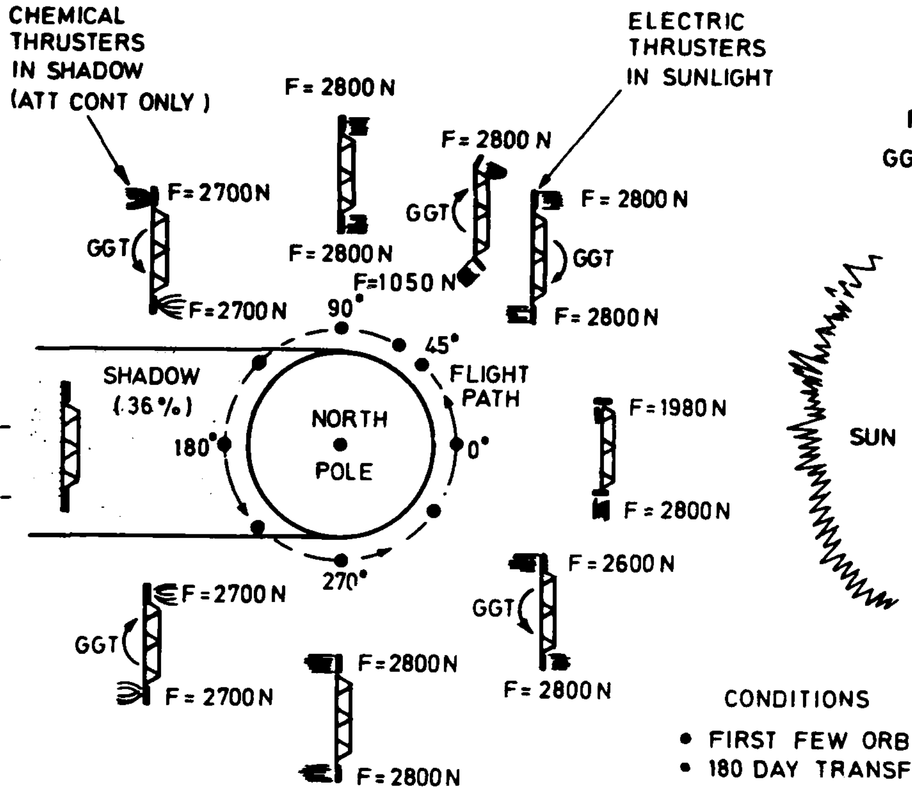
CHEMICAL THRUSTERS IN SHADOW (ATT CONT ONLY)
ELECTRIC THRUSTERS IN SUNLIGHT
F=2700N
F=2700N
GGT
F=2800N
F=2800N
F=2800N
GGT
F=1050N
F=2800N
GGT
F=2800N
90°
45°
FLIGHT PATH
SHADOW (36%)
180°
NORTH POLE
0°
270°
F=1980N
F=2800N
SUN
F=2700N
GGT
F=2700N
F=2800N
F=2800N
F=2600N
GGT
F=2800N

F = THRUST

GGT = GRAVITY GRADIENT TORQUE

SPACECRAFT DIMENSIONS-*
4.14km x 2.50km
BASIC MASS- 5.56 x 10^6 kg
ORBIT TRANSFER SYSTEM
MASS - 0.71 x 10^6 kg
ARGON PROPELLANT MASS-
1.52 x 10^6 kg
LO_2/LH_2 PROPELLANT MASS-
0.38 x 10^6 kg

*ASSUMES OVERSIZING TO ALLOW FOR SOLAR ARRAY DEGRADATION. EXTRA MASS 10^6 kg

CONDITIONS

- FIRST FEW ORBITS
- 180 DAY TRANSFER
- INITIAL $G = 5 \times 10^{-5}$
- TRANSFER F = 4600N
- TRANSFER · CONTROL F = 5600N

Fig 49 Thrusting strategy for rectangular section of 10GW SPS during spiral orbit raising (Boeing – Ref 43)

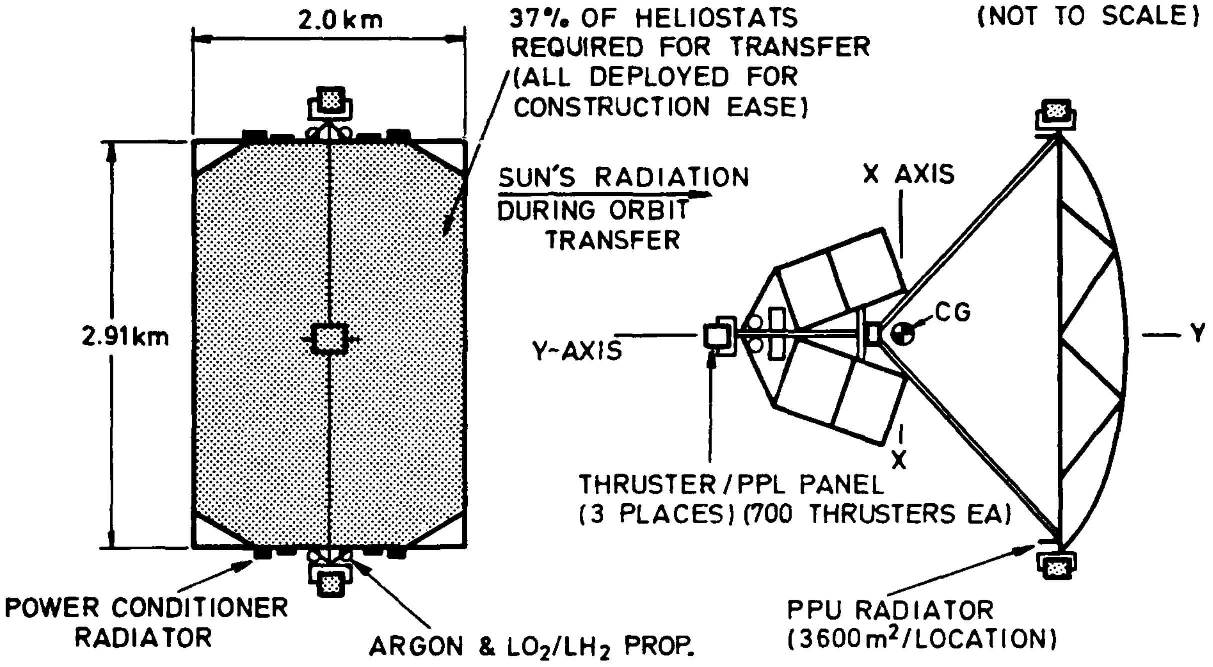
2.0 km
37% OF HELIOSTATS REQUIRED FOR TRANSFER (ALL DEPLOYED FOR CONSTRUCTION EASE)
(NOT TO SCALE)
SUN'S RADIATION DURING ORBIT TRANSFER
X AXIS
2.91 km
CG
Y-AXIS
Y
X
THRUSTER / PPL PANEL (3 PLACES) (700 THRUSTERS EA)
POWER CONDITIONER RADIATOR
ARGON & LO_2/LH_2 PROP.
PPU RADIATOR ($3600 m^2$/LOCATION)

MASS PROPERTIES SUMMARY

SATELITE MODULE (10^6kg)		ORBIT TRANSFER SYSTEM (10^6kg)	
● BASIC	6.25	● DRY	0.6
● SELF POWER MODIFICATIONS	0.10	● ARGON	1.23
		● LO_2/LH_2	0.27

Fig 50 Orbit transfer configuration for a section of a heat engine SPS (Boeing – Ref 43)

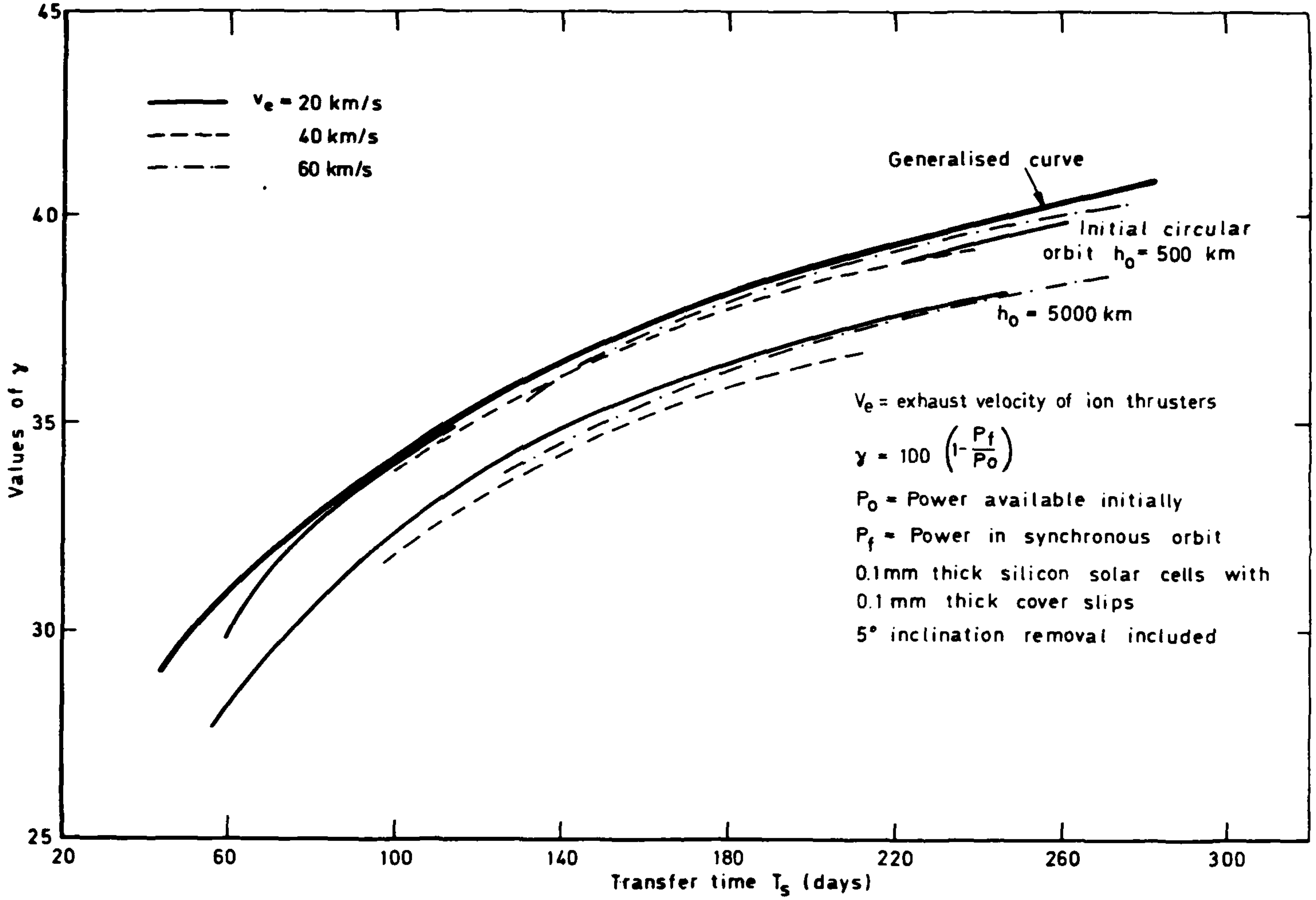

Fig 51 Percentage power loss as a function of transfer time, for two initial parking orbits

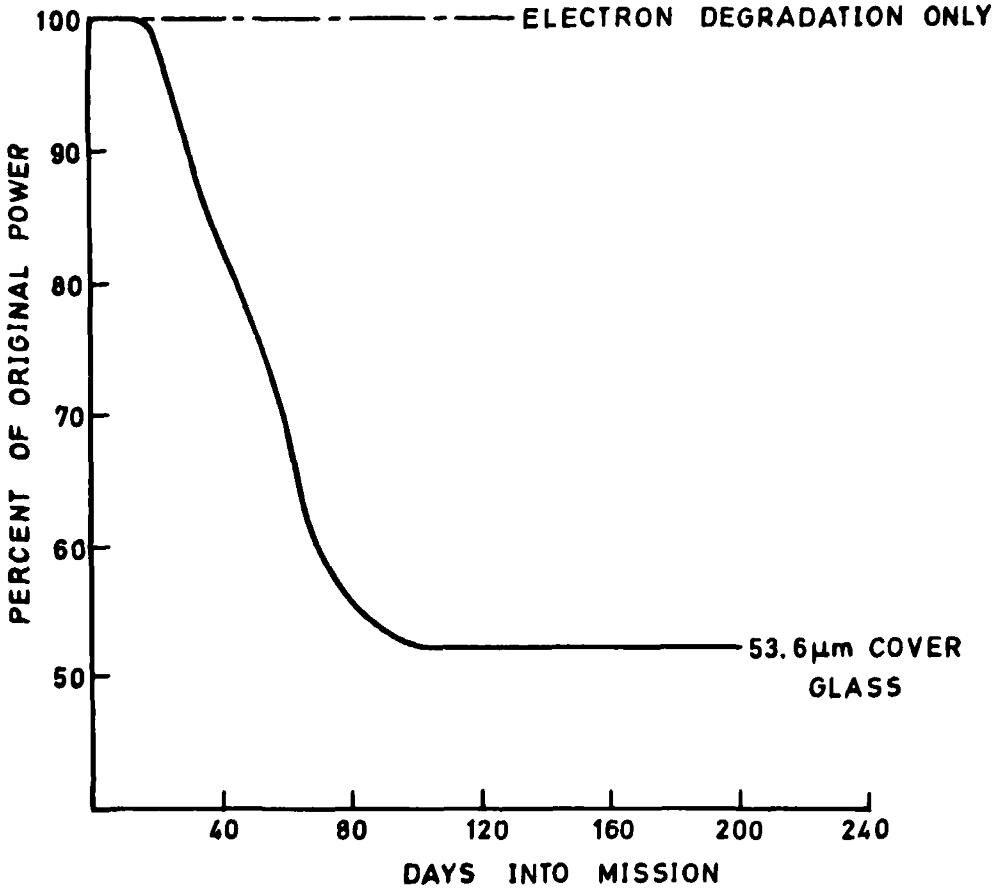

Fig 52 Degradation of solar array during orbit raising (Rockwell – Ref 159)

Fig 53

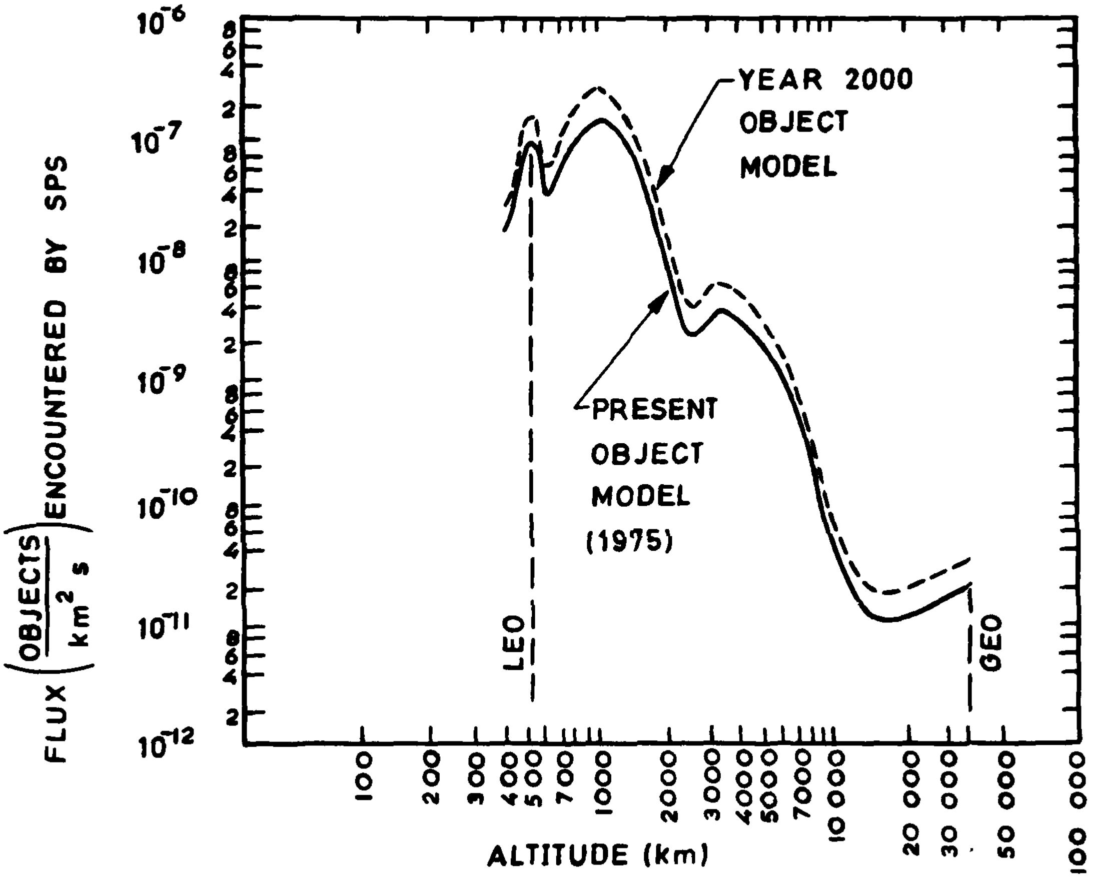

Fig 53 Flux of orbiting bodies as a function of altitude (Boeing – Ref 43)

TR 80034

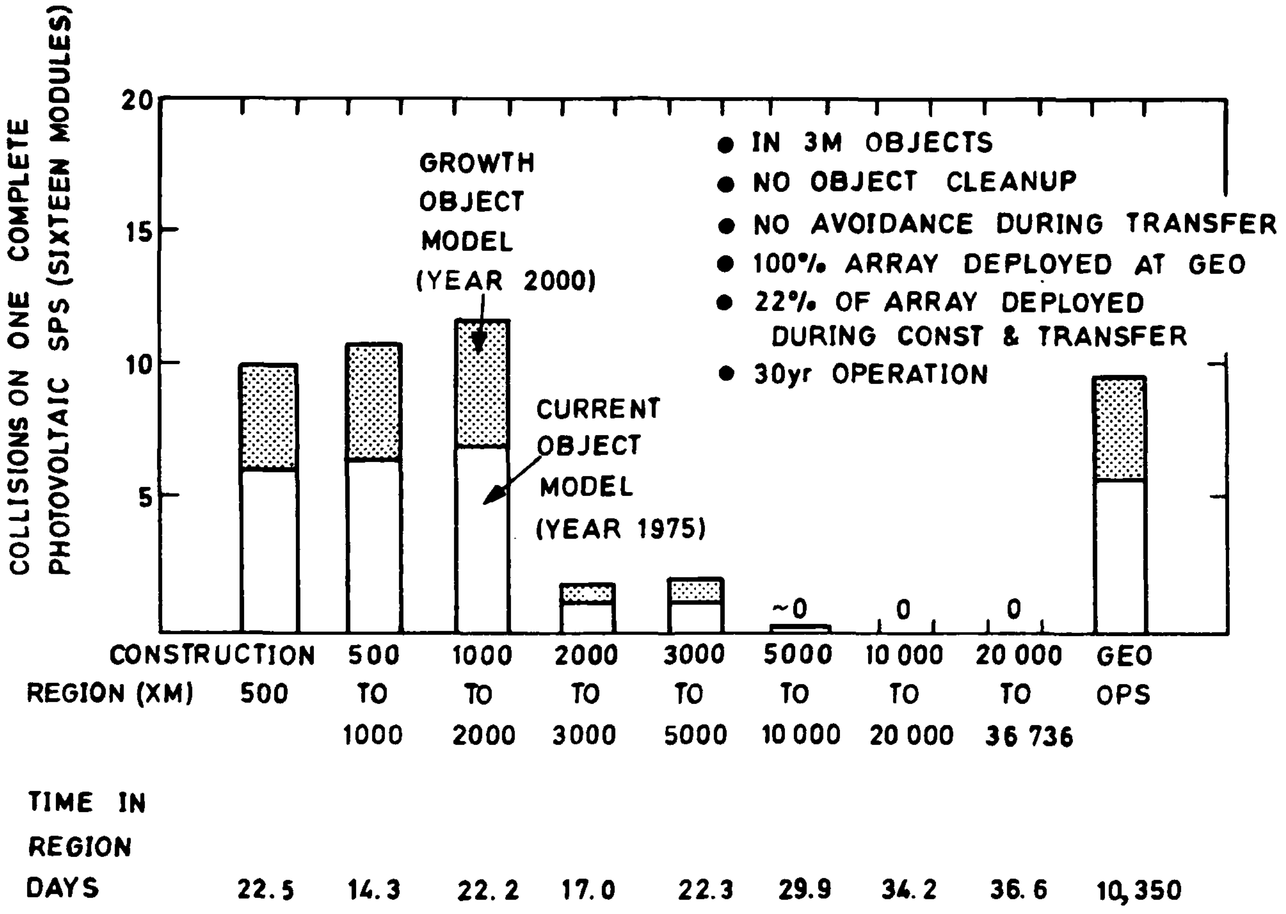

Fig 54 Collision risk during construction, orbit transfer, and operation of a 10GW SPS (Boeing – Ref 43)

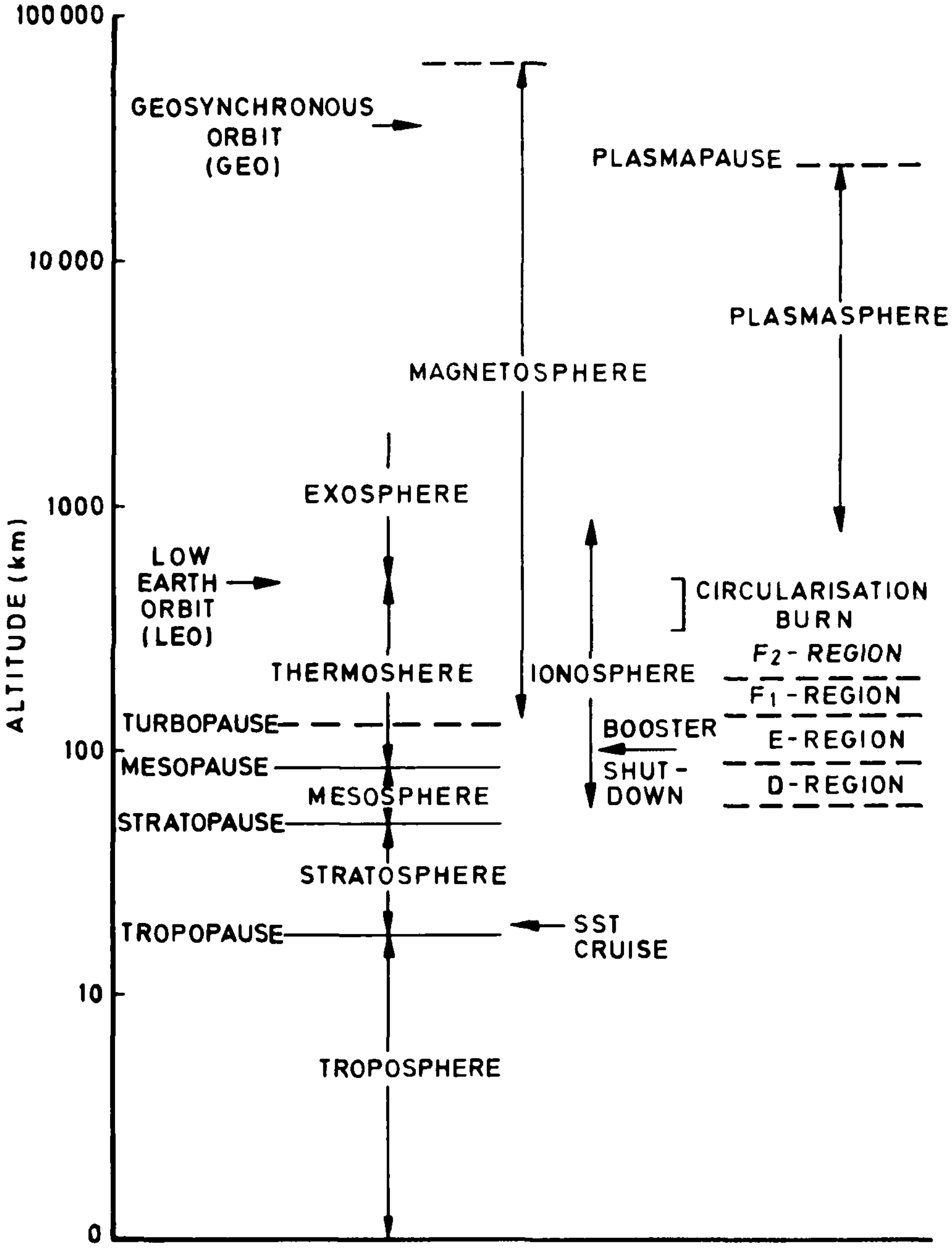
100 000
10 000
1000
100
10
0
ALTITUDE (km)
GEOSYNCHRONOUS ORBIT (GEO)
PLASMAPAUSE
PLASMASPHERE
MAGNETOSPHERE
EXOSPHERE
LOW EARTH ORBIT (LEO)
CIRCULARISATION BURN
F_2- REGION
THERMOSHERE
IONOSPHERE
F_1-REGION
TURBOPAUSE
BOOSTER
E-REGION
MESOPAUSE
SHUT-DOWN
D-REGION
MESOSPHERE
STRATOPAUSE
STRATOSPHERE
TROPOPAUSE
SST CRUISE
TROPOSPHERE

Fig 55 Regions of the atmosphere

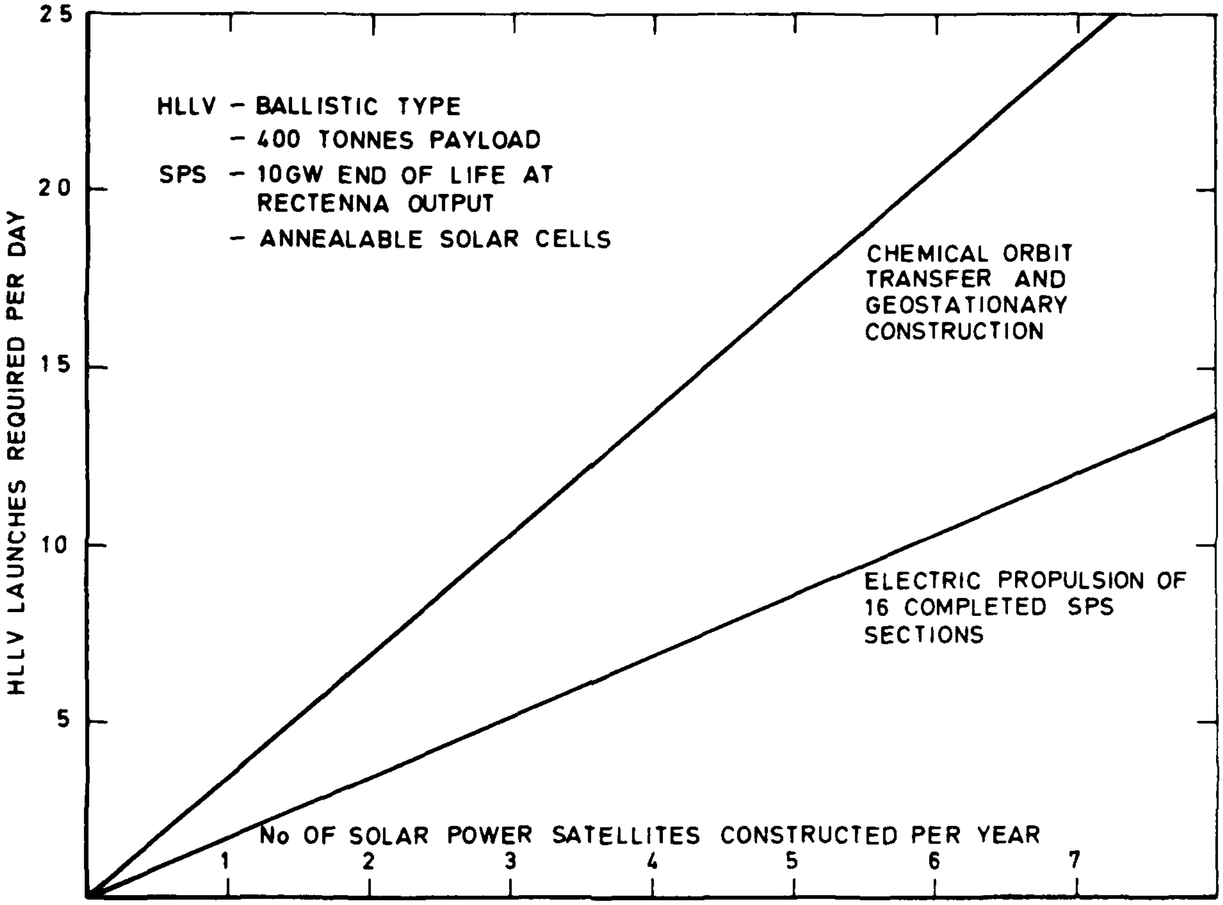

Fig 56 Number of HLLV launches required per day as a function of the number of satellites constructed per year for chemical and electric propulsion orbit transfer systems (E.E. Davis – Ref 66)

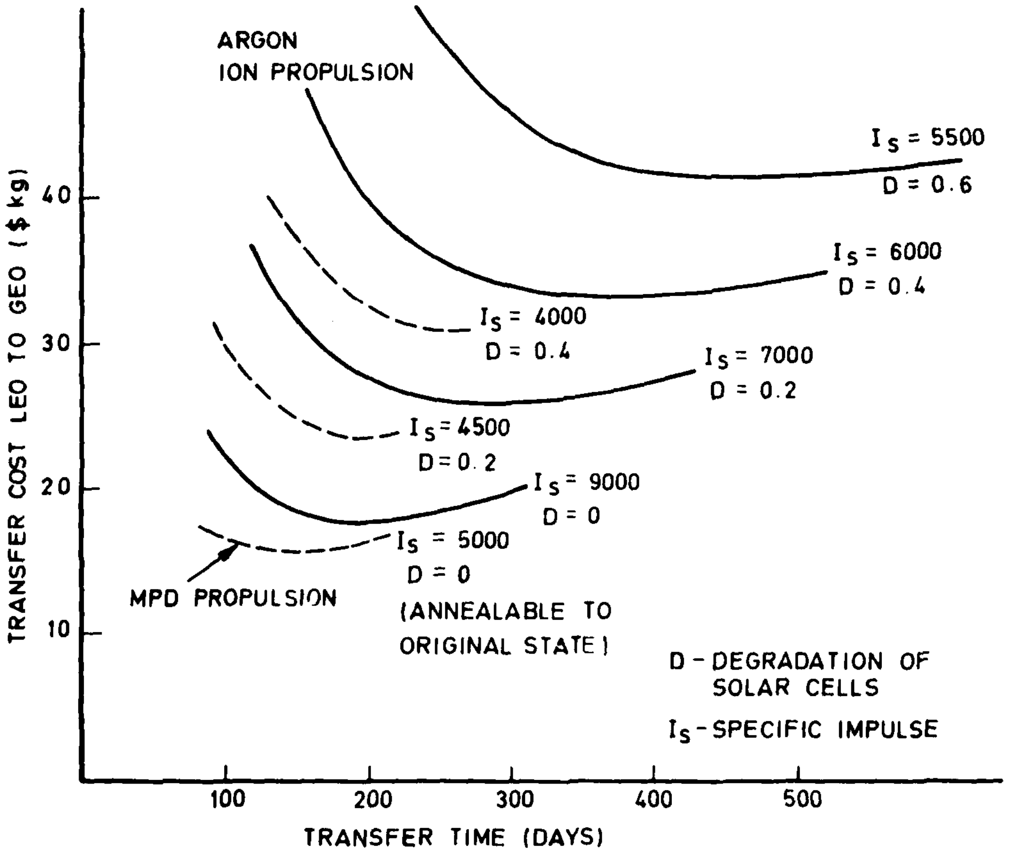

Fig 57 Transfer cost to geostationary orbit as a function of time taken for a range of values of specific impulse (Boeing/D. Grim – Ref 115)

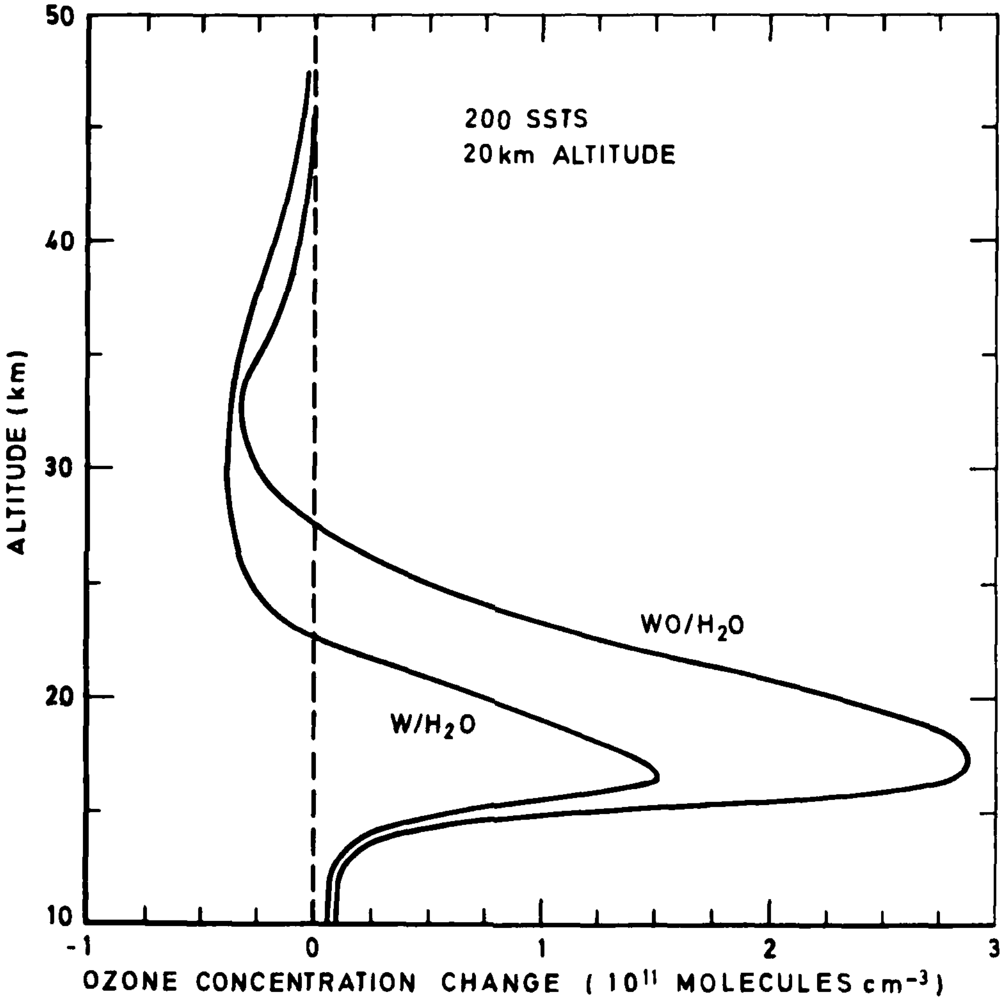

Fig 58 Calculated steady-state stratospheric ozone concentration changes due to an NO_x injection of 7 x 10^8 kg NO_2 yr^{-1} (globally averaged) both with and without water vapour emission (Nature – Ref 175)

Fig 59

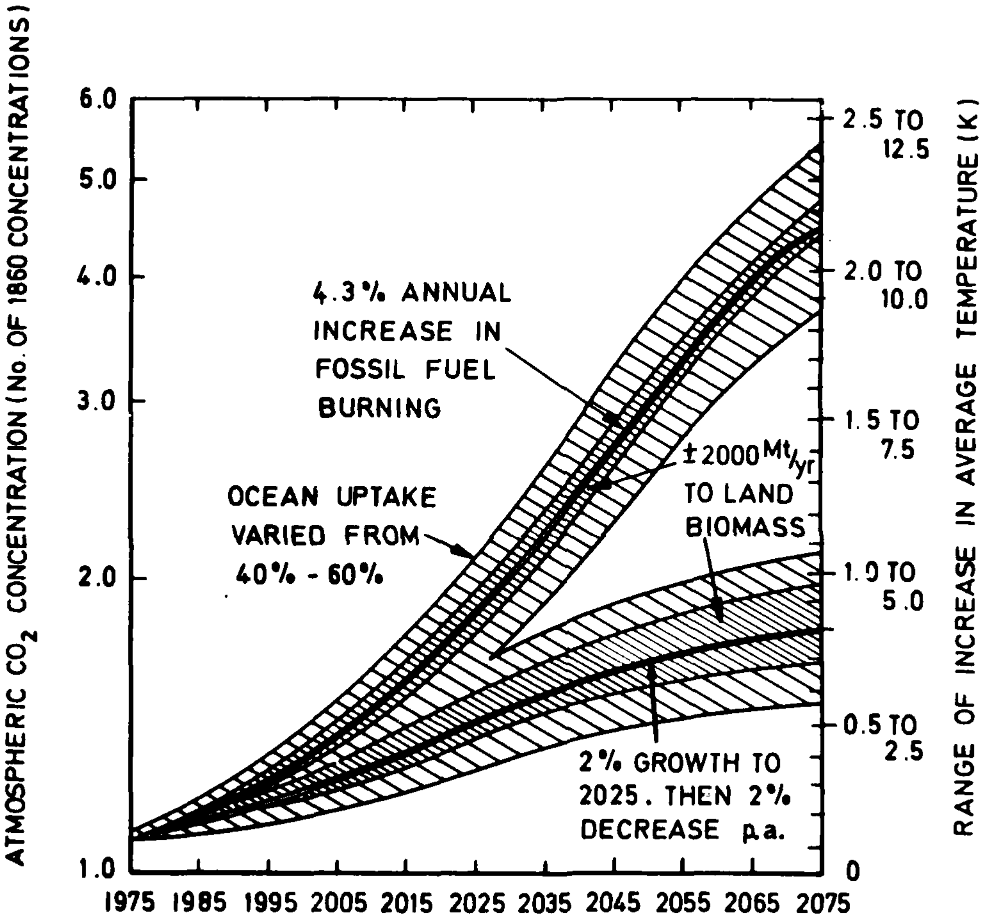

Fig 59 Projected growth in atmospheric CO_2 and associated range of mean temperatures for two scenarios of fossil fuel utilisation (NASA – Ref 179)

TR 80034

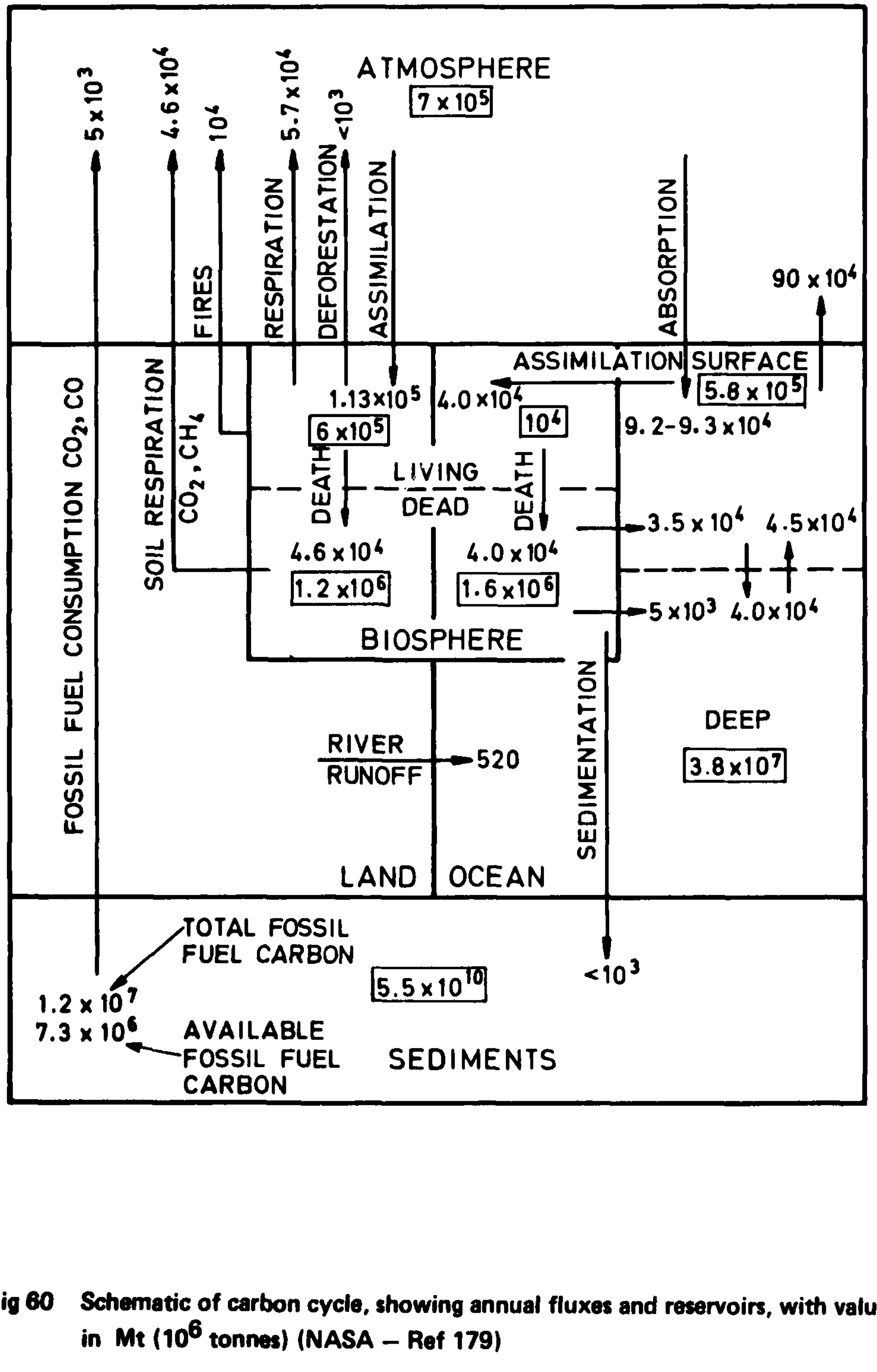
ATMOSPHERE
7 x 10^5
5 x 10^3
4.6 x 10^4
10^4
5.7 x 10^4
<10^3
FIRES
RESPIRATION
DEFORESTATION
ASSIMILATION
ABSORPTION
90 x 10^4
ASSIMILATION
SURFACE
5.8 x 10^5
1.13x10^5
4.0 x10^4
6 x10^5
10^4
9.2-9.3 x10^4
FOSSIL FUEL CONSUMPTION CO2, CO
SOIL RESPIRATION
CO2, CH4
DEATH
LIVING
DEAD
DEATH
3.5 x 10^4
4.5x10^4
4.6 x 10^4
1.2 x10^6
4.0 x 10^4
1.6 x10^6
5 x10^3
4.0x10^4
BIOSPHERE
SEDIMENTATION
DEEP
3.8x10^7
RIVER
RUNOFF
520
LAND
OCEAN
TOTAL FOSSIL FUEL CARBON
1.2 x 10^7
7.3 x 10^6
AVAILABLE FOSSIL FUEL CARBON
5.5 x10^10
<10^3
SEDIMENTS

TR 80034

Fig 60 Schematic of carbon cycle, showing annual fluxes and reservoirs, with values in Mt (10^6 tonnes) (NASA – Ref 179)

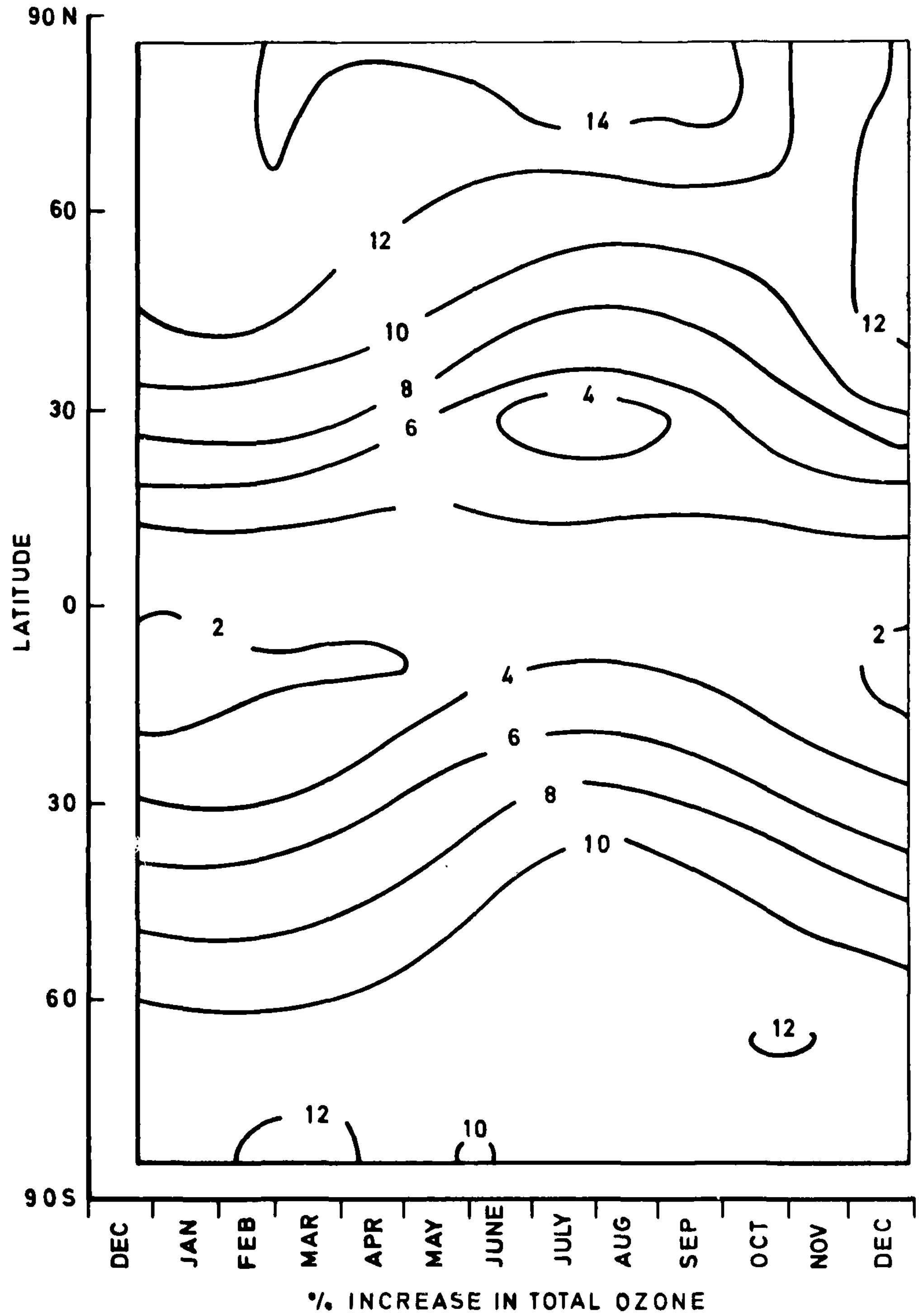

Fig 61 The latitude-time section of the percentage increase in total ozone following the doubling of CO_2 from 320 to 640 ppm (Nature – Ref 93)

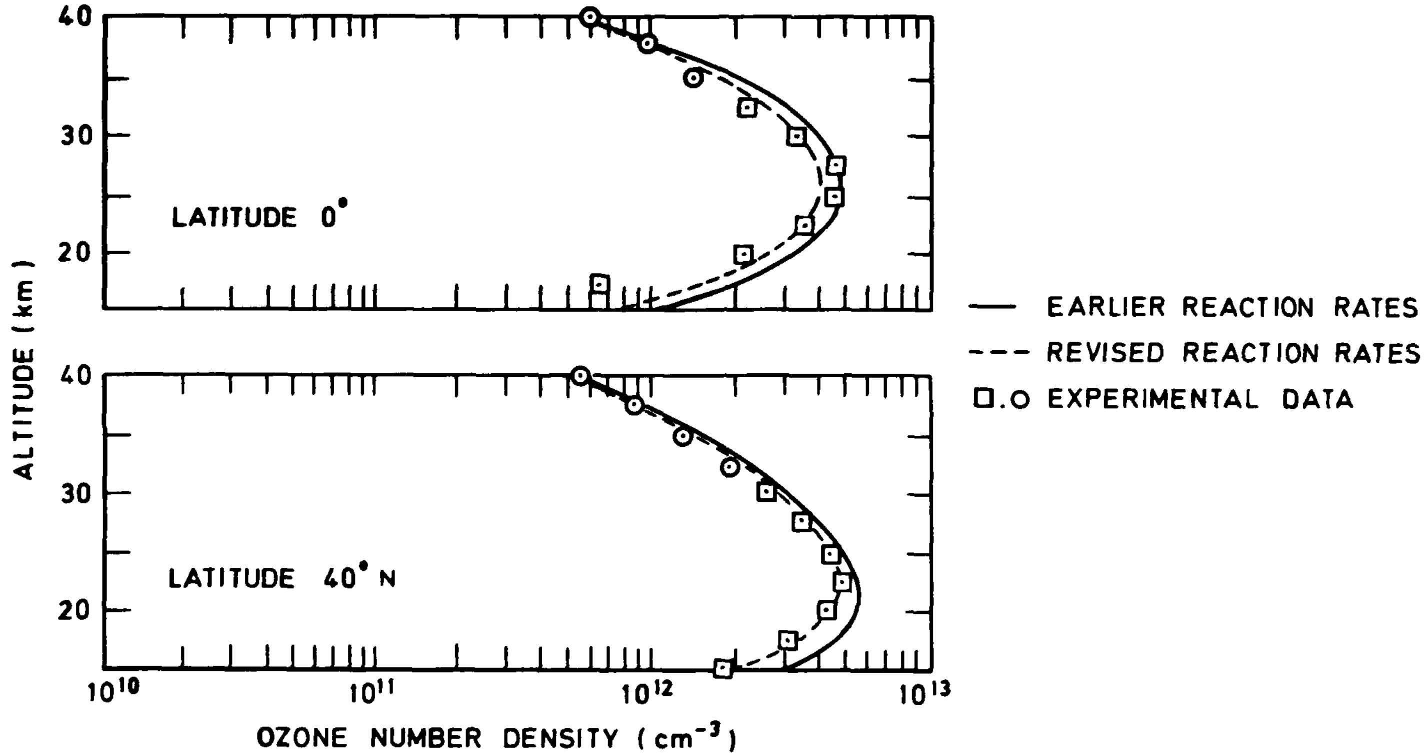

Fig 62 Comparison of experimental and theoretical ozone profiles in the stratosphere (Nature – Ref 193)

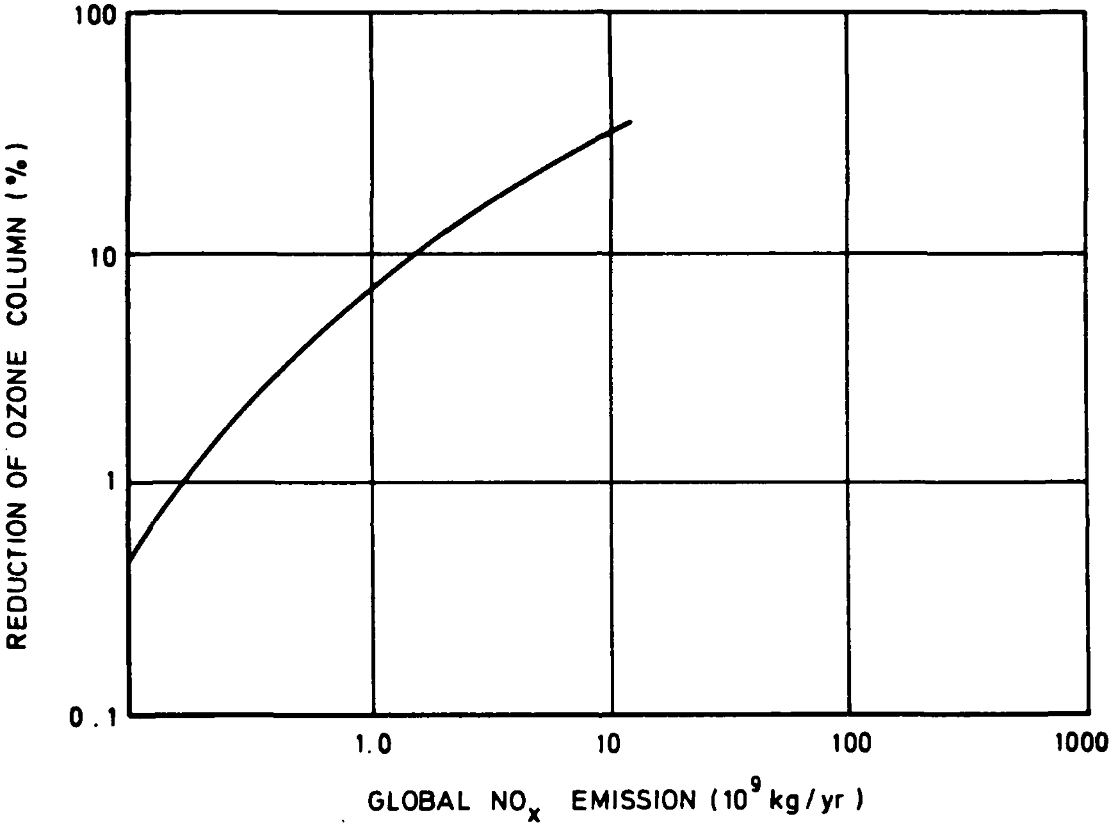

Fig 63 Ozone concentration reduction as a function of NO_x emission on the basis of early reaction rates (British Interplanetary Society – Ref 182)

AD-A089 526 ROYAL AIRCRAFT ESTABLISHMENT FARNBOROUGH (ENGLAND) F/G 21/3
SOLAR POWER SATELLITES - A REVIEW OF THE SPACE TRANSPORTATION O--ETC(U)
MAR 80 D G FEARN
UNCLASSIFIED RAE-TR-80034 DRIC-BR-74953 NL

3 OF 3
AD
A089526

END
DATE
FILMED
10-80
DTIC

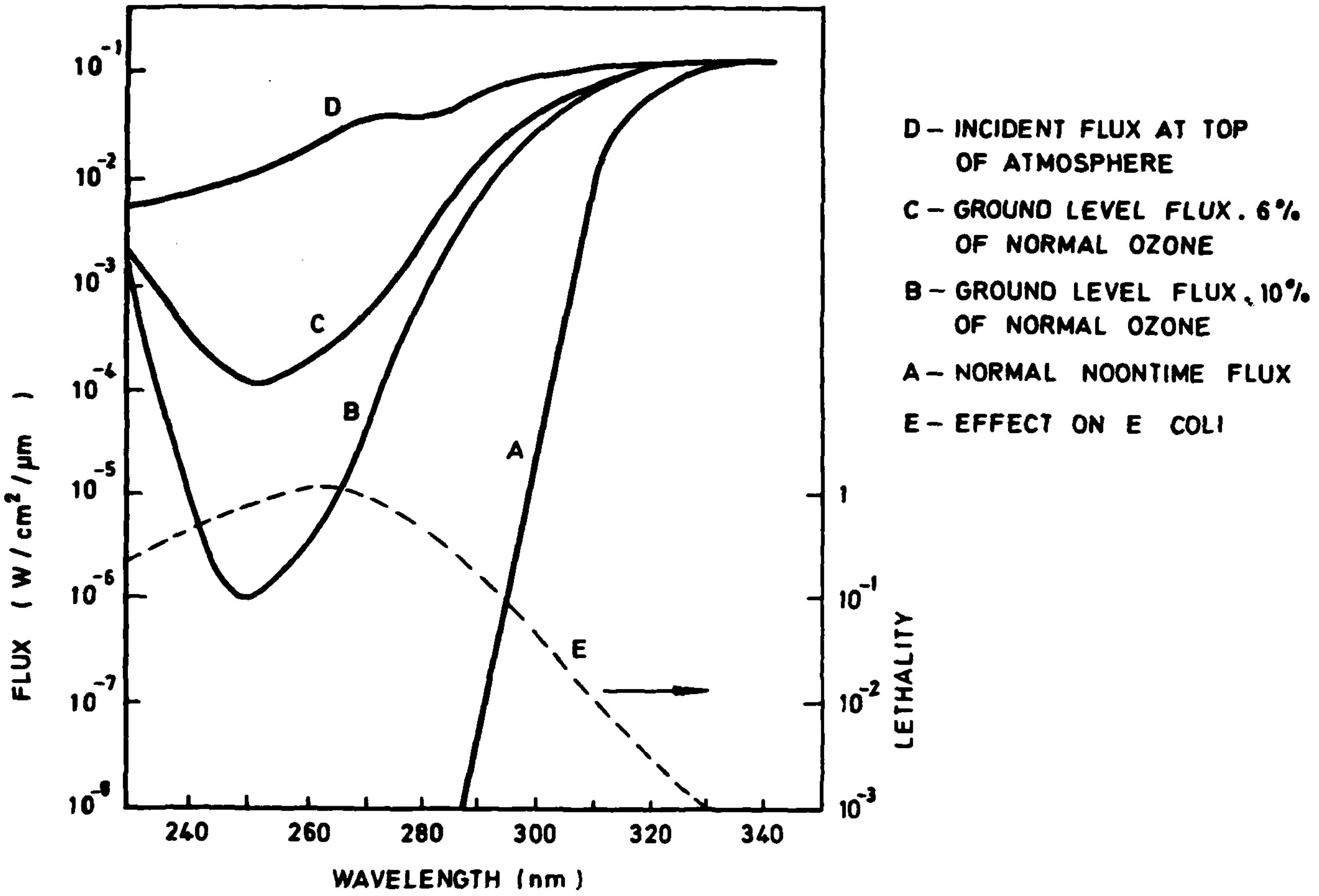

Fig 64 Influence of the ozone layer on ultraviolet radiation flux at ground level (British Interplanetary Society – Ref 182)

REPORT DOCUMENTATION PAGE

Overall security classification of this page

UNLIMITED

As far as possible this page should contain only unclassified information. If it is necessary to enter classified information, the box above must be marked to indicate the classification, e.g. Restricted, Confidential or Secret.

1. DRIC Reference (to be added by DRIC)	2. Originator's Reference RAE TR 80034	3. Agency Reference N/A	4. Report Security Classification/Marking UNLIMITED

5. DRIC Code for Originator 7673000W	6. Originator (Corporate Author) Name and Location Royal Aircraft Establishment, Farnborough, Hants, UK
5a. Sponsoring Agency's Code N/A	6a. Sponsoring Agency (Contract Authority) Name and Location N/A

7. Title Solar power satellites - a review of the space transportation options

7a. (For Translations) Title in Foreign Language

7b. (For Conference Papers) Title, Place and Date of Conference

8. Author 1. Surname, Initials Fearn, D.G.	9a. Author 2	9b. Authors 3, 4	10. Date March 1980	Pages 192	Refs. 200
11. Contract Number N/A	12. Period N/A	13. Project	14. Other Reference Nos. Space 577		

15. Distribution statement
(a) Controlled by – Head of Space Department, RAE (RAL)
(b) Special limitations (if any) –

16. Descriptors (Keywords) (Descriptors marked * are selected from TEST)

Solar power satellites. Electric propulsion. Space transportation. Heavy lift launch vehicles. Environmental effects. Cost analyses.

17. Abstract

Solar power satellites, if developed, could supply a large proportion of the world's future electrical energy requirements in a safe and pollution-free manner. However, such enormous orbiting structures, with masses of up to 100000 tonnes, can only be built and operated if suitable transportation systems are provided. This Report reviews the options available for lifting both heavy payloads and personnel to low earth orbit, and from there to geostationary orbit. It is concluded that conventional launcher technology, using liquid hydrogen/liquid oxygen engines, should be adequate for the former task. The latter can best be accomplished using electric propulsion, with ion thrusters being the most suitable devices, owing to their high efficiency and advanced state of development. Environmental effects of such a transportation system are considered, and it is concluded that they should not prove to be unacceptable.